Manual
Chain & flight conveyor
T44/T45

Version 70502.1

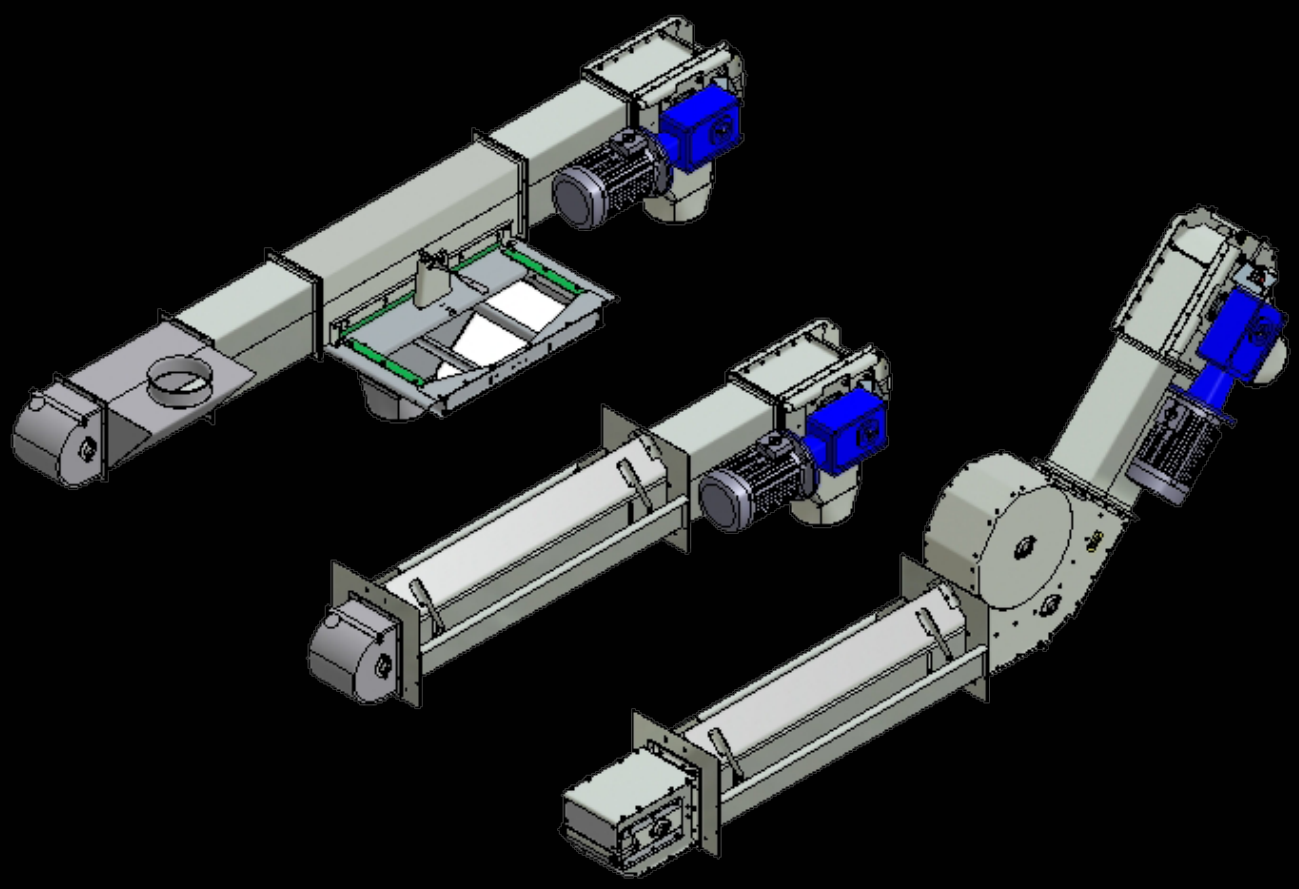

Contents

Introduction

JJEMA AGRO A/S is a modern factory, which specializes in producing and delivering equipment for transport systems for raw or cleaned grain, seeds and granulates.

Our current product range is the result of more than 50 years experience in machine development especially for the agriculture in close collaboration with our customers – and our company is highly regarded in the industry due to the quality and versatility of our products.

JEMA AGRO A/S conveyors and transport systems are compatible with ALL types of dryer- and silo systems.

Important!
Please read these instructions carefully before assembly and use.

EU Declaration of conformity

The manufacturer: JEMA AGRO A/S
Kløservejen 2, Sahl
DK-8850 Bjerringbro
Tlf. +45 86 68 16 55

Hereby declares that:

Product: Chain & flight conveyor
Type: T44/T45
Year of production: 2006

- Conforms to the Machine directive 2006/42/EF with special reference to the directive appendix 1 regarding major health- and safety regulations regarding construction and production of the machines.

The following standards have been applied:

EN ISO 12100-1:2005	Basic terminology and methodology
EN ISO 12100-2:2005	Technical principles
EN 1050:1997	Principles for risk assessment

- is in accordance with EMC-directive 04/108/EF of 15th December 2004 regarding electro-magnetic compatibility.

Director	Jens-Peter Pedersen
Title	Name
29.11.2010	
Date	Signature

Conditions of use

JEMA AGRO A/S chain & flight conveyors T44/T45 have been constructed for transport of grain, granular materials and seed mix.

- The chain & flight conveyors T44/T45 must only be used for the product(s) specified in the contract.
- The electrical connections must be done by a qualified electrician.
- The chain & flight conveyors T44/T45 must be potential adjusted in accordance with the current local regulations
- The chain & flight conveyor has been thoroughly controlled regarding maintenance, and a checklist has been drawn up containing regular cleaning- and maintenance intervals. If these intervals are not observed, the JEMA AGRO conditions for a trouble-free operation cease to exist and the warranty will be invalid.
- During installation, maintenance or repair the electric supply to the chain & flight conveyors must be disconnected and secured against accidental reconnection.
- The user manual must be kept / be available in close proximity to the chain & flight conveyor T44/T45

General information

Delivery

The chain & flight conveyor is disassembled for shipment. Standard packing (pallet/wooden boxes, grid boxes, etc.) Regarding the actual transport there are no specific requirements apart from normal consideration.

The shipment includes the parts stated in the order confirmation.

Please read this manual carefully before installation and use.

Storage

There are no precautions regarding long-time storage.

After delivery the components must be kept in a suitable, dry storage area before installation.

Noise level

A noise level test was conducted for the chain & flight conveyor. The level has been measured in a distance of 1 m from the conveyor surface and at a height of 1.6 m from the floor level. During the test the chain & flight conveyor was running unloaded, which is the operational state of maximum noise level.

The measured noise level is below 70 dB

Type Plate

The type plated is fitted on the drive station.

Construction

The chain & flight conveyor type T44/T45 is constructed by standard elements, which can be combined and easily integrated into all grain conveyor systems. It is characterized by a high capacity and compact dimensions. The chain & flight conveyor is available in two versions:

- Model A, closed transport chain system
- Model B adjustable inlet trough

The chain & flight conveyor is made of galvanized steel, which makes it perfectly suited for outdoor use. Furthermore it is fitted with a high quality roller chain with riveted rubber slats.

The chain & flight conveyor can be fitted with one or several inlets, facing right or left according to the individual requirements. The outlet can be operated by manually, or oprated by a motor.

The drive station is fitted with a tension mechanism, the chain & flight conveyor can be operated by drive pulleys (1000 rpm) or a pinion gear motor, which can be fitted on the right or left hand side of the drive station.

The chain & flight conveyor consists of:

- Drive station
- Closed bottom section or tension section
- Chain with rubber slats
- Extensions from 0.125 m to 2.5 m.
- Intermediate outlet
- Inlet trough
- Side inlet
- Outlet
- Motor.

Capacity

The table below shows the various density capacities:

Density	T44 (40 m³/h)	T45 (80 m³/h)
650 kg. pr. m³	26 t/h	52 t/h
700 kg. pr. m³	28 t/h	56 t/h
750 kg. pr. m³ (wheat)	**30 t/h**	**60 t/h**

Measured in cleaned, storable material at a power supply of 50 Hz
The capacity varies according to the nature of the material

T44	J In opening	Capacity t/h	T45	J In opening	Capacity t/h
Pulley drive with motor 1.500 rpm	15	5	Pulley drive with motor 1.500 o/m	15	25
	25	11		25	31
Gear motor 280 rpm	35	18	Gear motor 280 rpm	35	38
	45	25		45	45
Pulley drive with motor 1.000 rpm	20	10	Pulley drive with motor 1.000 rpm	20	30
	35	16		35	40
Gear motor 180 rpm	50	23	Gear motor 180 rpm	50	50
	65	30		65	60

The capacity is measured at a density of 750 kg/m³.

Important! – The J dimension in the sketch is just for guidance.
Important! - Remember to adjust the inlet plates before starting.

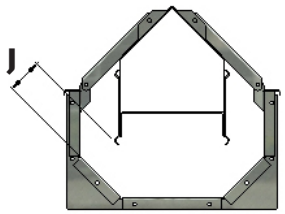

Technical specifications – power consumption

Conveyor T44 - power consumption in kW:

Type	0-16m	17-23m	24-30m	31-41m
T44	2,2 kW	3,0 kW	4,0 kW	5,5 kW

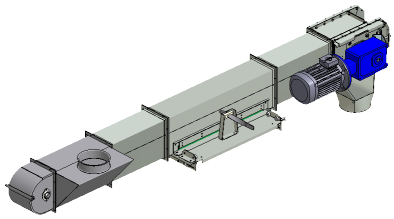

Conveyor T45 - power consumption in kW:

Type	0-11m	12-15m	16-21m	22-29m	30-41m
T45	2,2 kW	3,0 kW	4,0 kW	5,5 kW	2 x 4,0 kW

Intake conveyor T44 - power consumption in kW:

Type	0-16m	17-21m
T44	2,2 kW	3,0 kW

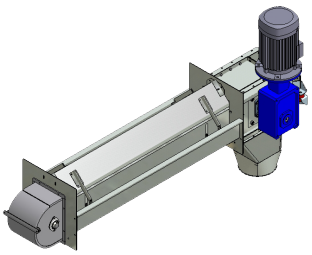

Intake conveyor T45 - power consumption in kW:

Type	0-11m	12-15m	16-21m
T45	2,2 kW	3,0 kW	4,0 kW

Intake conveyor T45 - power consumption in kW **with wide drive station:**

Type	0-4m	5-8m	9-15m	16-21m
T45	2,2 kW	3,0 kW	4,0 kW	5,5 kW

Conveyor T44/T45 with 45° bend:

Length, metres	Height / Inclination
	1,72m. / 2,14m
	T44/T45 kW
3,10	2,2
4,10	2,2
5,10	2,2
6,10	2,2
7,10	2,2
8,10	2,2
9,10	2,2
10,10	2,2
11,10	2,2

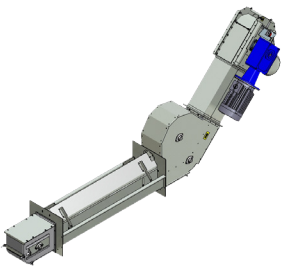

Drive station

The drive station is delivered as a complete unit.
The outlet and motor are delivered separately.

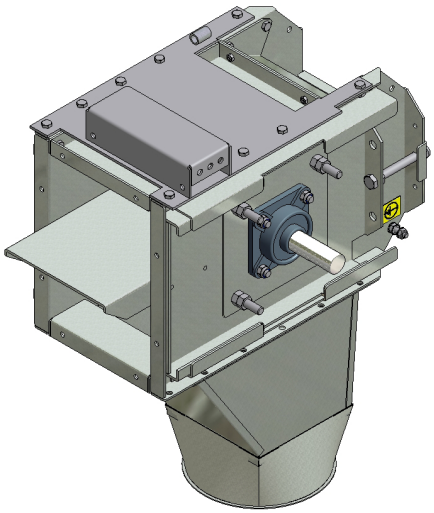

Extensions

The extensions are available in various lengths: 2.5 m, 2.0 m, 0.25 m, 0.125 m.

Extensions with inspection doors are available in lengths of 2.5 m.

Inlet troughs are available in lengths of 2.0 m. with inspection door: 1.25 m, 1.0 m, and 0.5 m.

The elements can be combined to obtain any length with intervals of 0.125 m.

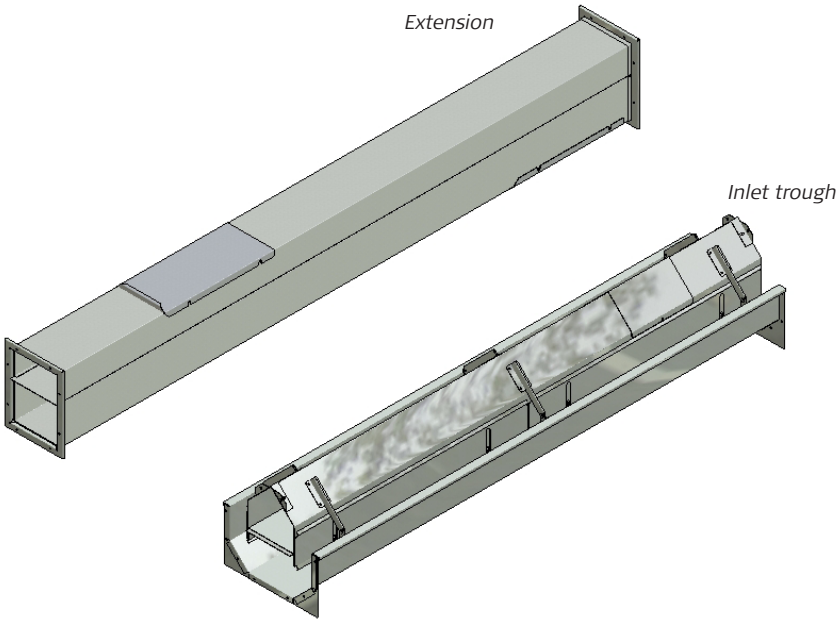

Tension section

The tension section is supplied as a complete unit.

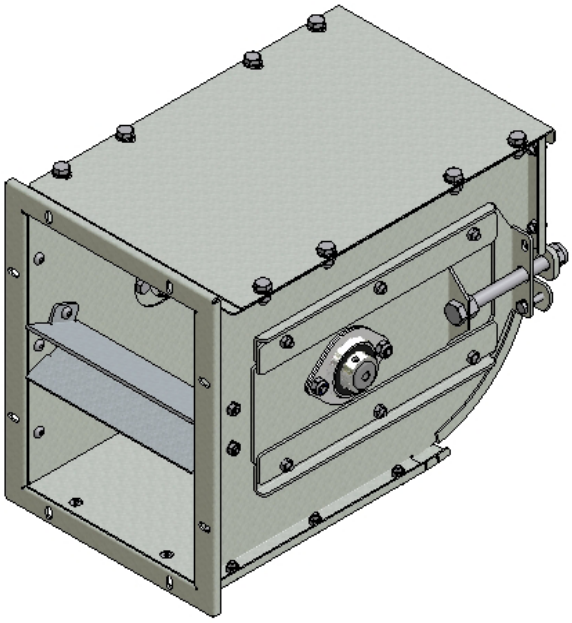

Closed bottom section

Closed conveyor bottom section.

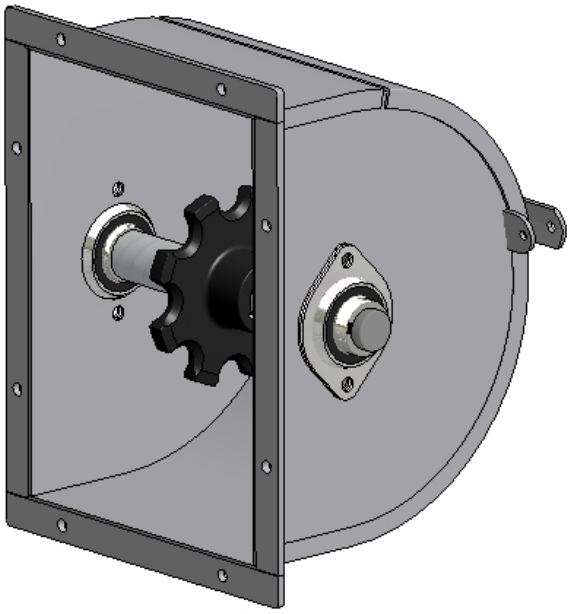

Scale drawing T44/T45

	A	B	C	D	E	F	G	H	I
T44	Ø200	330	300	400	215	500	805	960	Ø200
T45	Ø200	330	300	400	215	500	805	960	Ø200

	J	K	L	M	N	O	P	Q	R
T44	500	328	330	Ø200	580	190	190	Ø200	375
T45	500	328	330	Ø200	580	250	230	Ø200	440

	S	T	U	V	X	Y	Z	Æ	Ø
T44	670	210	225	890	400	750	100	420	405
T45	730	210	285	890	400	750	100	420	405

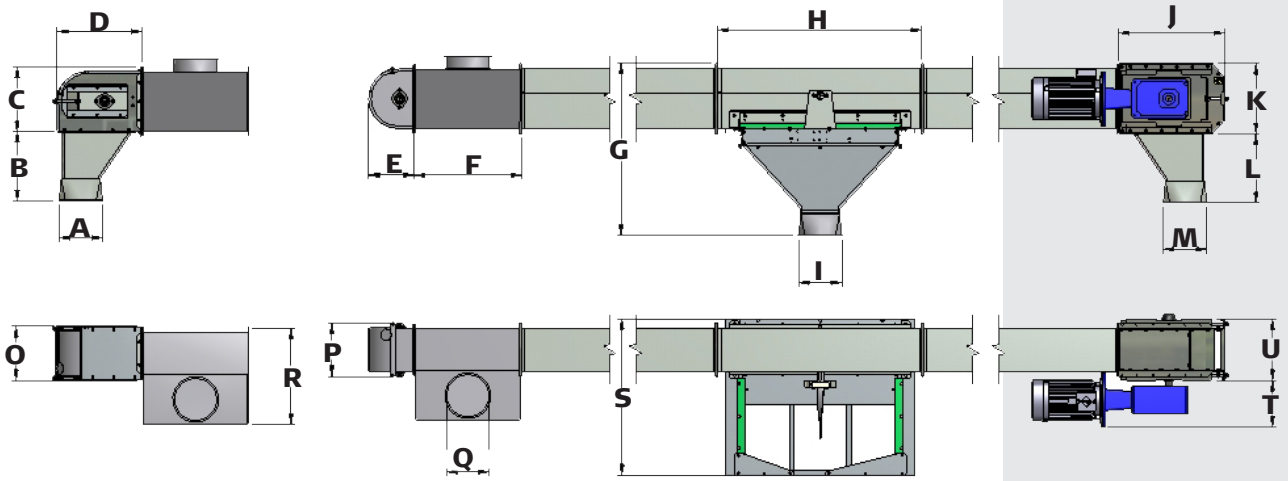

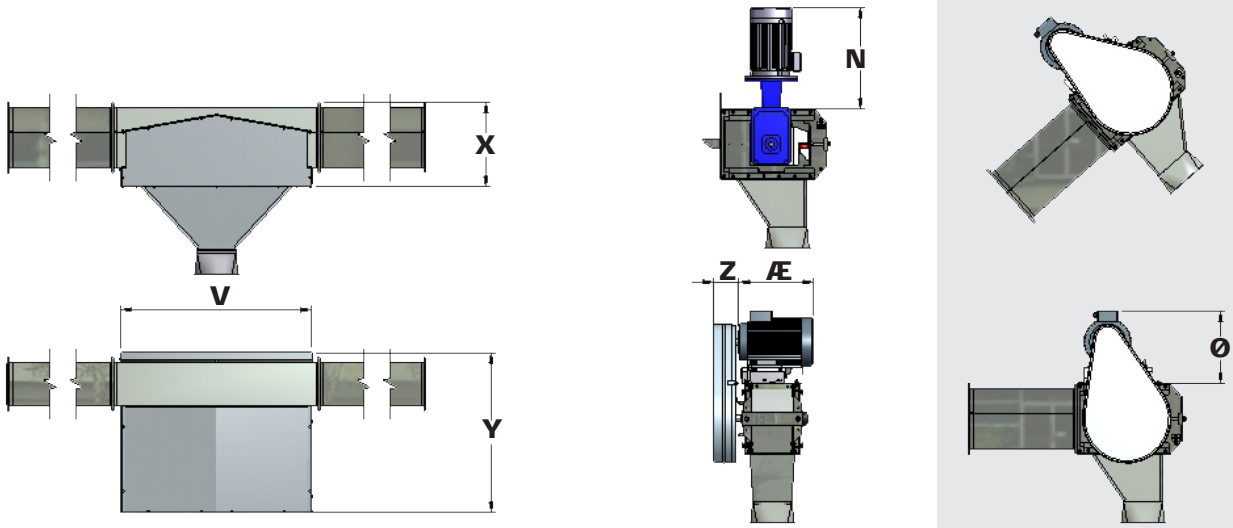

Scale drawing T44/T45 – grain pit

	A	B	C	D	E	F	G	H	I	J	K	L
T44	150	225	340	215	500	328	330	Ø200	580	190	225	200
T45	165	225	405	215	500	328	330	Ø200	580	230	285	200

	M	N	O	P	Q	R	S	T	U	V	X	Y
T44	100	420	405	300	385	690	775	190	430	400	300	400
T45	100	420	405	300	385	690	775	225	470	460	300	460

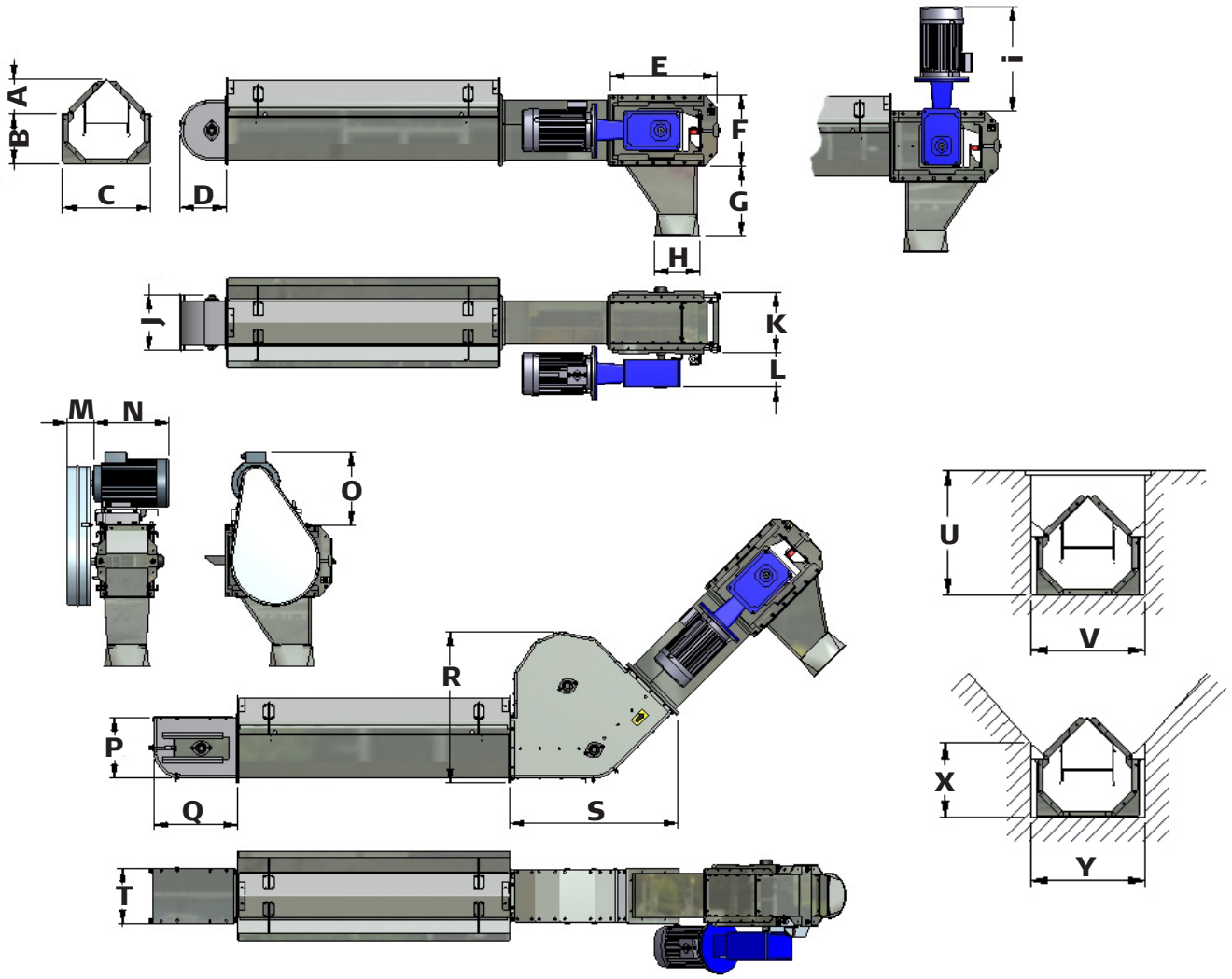

Upon receipt

Please check that all parts and components are included in the shipment and check for possible transport damages.

NB: Make sure that the relevant supplier documentation is attached. In case of missing documentation, please contact JEMA AGRO A/S – remember to state the order no.

Remember all necessary safety equipment before installation.

Please read this manual carefully before assembly or installation work begins.

Warning labels

The chain & flight conveyor is fitted with warning labels.

Warning!
The covers and shields must never be opened or removed, when the machine is working.

Warning!
Always keep hands away from rotating augers/propellers.

Foundation

The chain & flight conveyor should be placed on a sufficiently hard, level surface that is able to carry the load in question.

Lifting equipment

Make sure to have the required SWL-approved lifting equipment/crane, required for the actual job.

The lifting equipment must be approved to carry the load in question. The load capacity for the individual components can be found in "Parts list T44/T45" in this manual.

The total weight of machines is stated in the section "Weight table - chain and flight conveyor T44/T45".

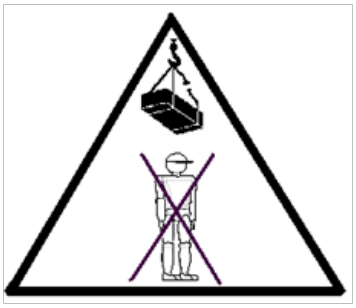

NB: Always make sure that nobody is standing under a suspended load.

Lifting instructions

The drawing below shows how to lift the chain & flight conveyor using the attached brackets.

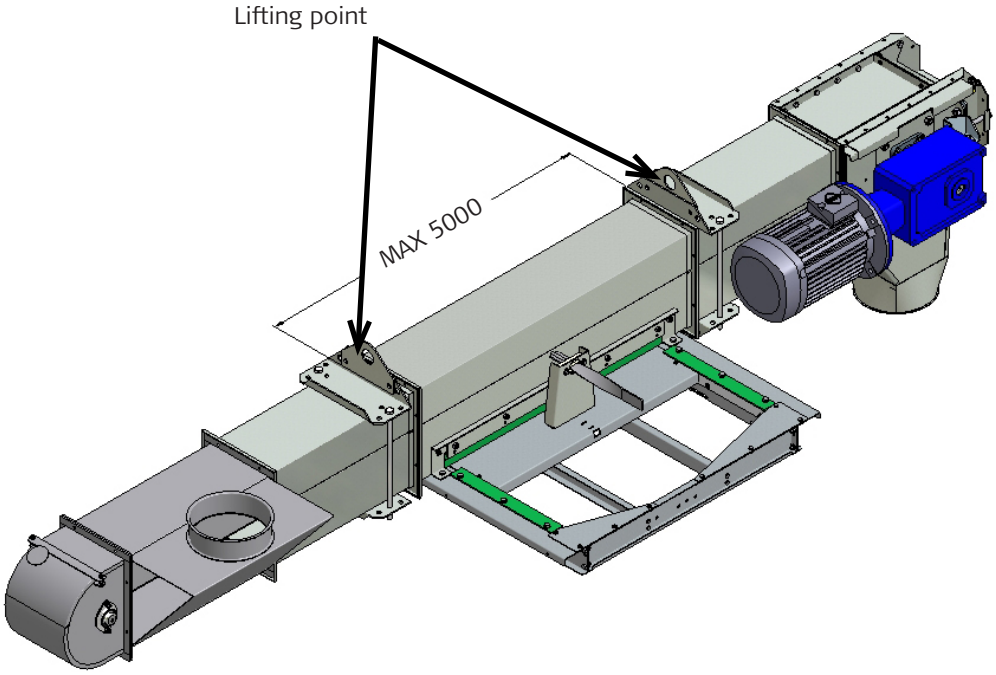

Weight table – individual components T44/45

	Description	T44 Part no.	Weight kg	T45 Part no.	Weight kg
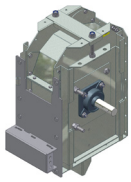	Drive station for pulley drive	51577	36	52116	39
	Drive station for pinion gear motor, RHS	51583	36	52483	39
	Drive station for pinion gear motor, LHS	51585	36	52485	39
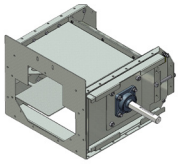	Drive section, wide model	-	-	45041	42
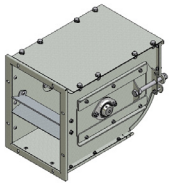	Tension section	44095	12,61	45095	13,77
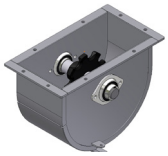	Elevator boot, closed without chain	51231	6,6	52231	7,3
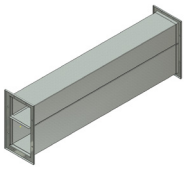	Extension 2.5 m with inspection door	51012	35	52012	37
	Extension 2.5 m.	51021	35	52021	37
	Extension, 2.0 m	51022	28	52022	32
	Extension, 1.0 m	51024	14	52024	16
	Extension, 0.5 m	51025	7	52025	8
	Extension, 0.25 m	51026	3	52026	5
	Extension 1.25 m	51027	2	52027	3

	Description	T44 Part no.	Weight kg	T45 Part no.	Weight kg
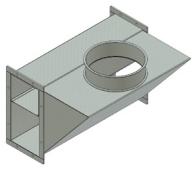	Extension 0.5 m with side inlet d200 without chain	44130	10,5	45130	12
	Chain complete, running metres	20028	2	40028	4
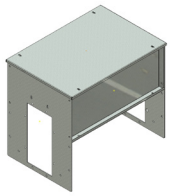	Trough kit with cover for 0.5 m inlet trough	44024	12	45024	13
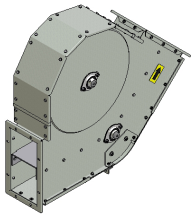	45° bend without chain with sprocket	44060	30,50	45060	31,60
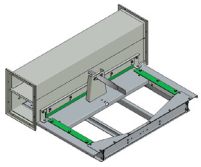	Intermediate outlet with 1,0 m extension	44101	35,10	45101	37,20
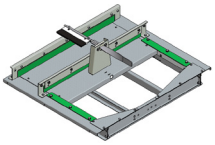	Intermediate outlet without extension	44100	23,96	45100	25,82
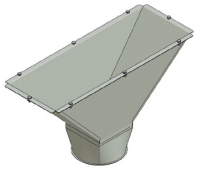	Outlethopper SK200 for Intermediate outlet	44102	6,60	45102	7,08

Weight table – chain & flight conveyor T44/45

Complete with pinion gear motor and inlet trough.

Length, metres	T44	T45
	Pinion gear motor 180 rpm	Pinion gear motor 180 rpm
	Kg.	Kg.
3,0	151,5	176
4,0	179,5	210
5,0	207,5	244
6,0	235,5	278
7,0	263,5	318
8,0	291,5	352
9,0	319,5	386
10,0	347,5	420
11,0	375,5	454
12,0	403,5	488
13,0	431,5	522
14,0	459,5	562
15,0	487,5	596
16,0	515,5	630
17,0	543,5	664
18,0	571,5	698
19,0	599,5	732
20,0	627,5	766
21,0	655,5	800

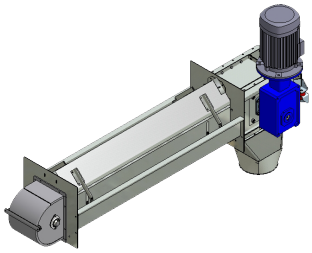

Complete with pulley drive and inlet trough.

Length, metres	T44	T45
	Motor 1500 rpm pulley kit 71/355	Motor 1500 rpm pulley kit 71/355
	Kg.	Kg.
3,0	151,5	176
4,0	179,5	210
5,0	207,5	244
6,0	235,5	278
7,0	263,5	318
8,0	291,5	352
9,0	319,5	386
10,0	347,5	420
11,0	375,5	454
12,0	403,5	488
13,0	431,5	522
14,0	459,5	562
15,0	487,5	596
16,0	515,5	630
17,0	543,5	664
18,0	571,5	698
19,0	599,5	732
20,0	627,5	766
21,0	655,5	800

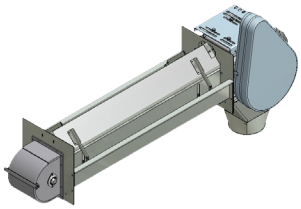

Weight table – chain & flight conveyor T44/T45

Complete with pinion gear motor, intermediate outlet and side inlet

Length, metres	T44	T45
	Pinion gear motor 180 rpm	Pinion gear motor 180 rpm
	Kg.	Kg.
4,0	159,6	182
5,0	177,6	206
6,0	195,6	230
7,0	213,6	260
8,0	231,6	284
9,0	249,6	308
10,0	267,6	332
15,0	363,6	457
20,0	453,6	577
25,0	548,6	708
30,0	638,6	828
35,0	739,6	941
41,0	847,6	1063

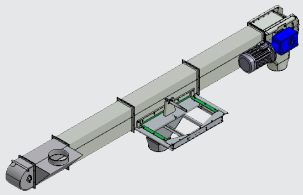

Complete with pinion gear motor, intermediate outlet and side inlet

Length, metres	T44	T45
	Motor 1500 rpm pulley kit 71/355	Motor 1500 rpm pulley kit 71/355
	Kg.	Kg.
4,0	159,6	182
5,0	177,6	206
6,0	195,6	230
7,0	213,6	260
8,0	231,6	284
9,0	249,6	308
10,0	267,6	332
15,0	363,6	457
20,0	453,6	577
25,0	548,6	708
30,0	638,6	828
35,0	739,6	941
41,0	847,6	1063

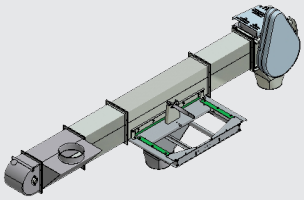

Weight table –T44 (gear motor)

Complete with pinion gear motor, 45° bend and inlet trough.

Length in metres	Height / Inclination 1,63m. / 2,05m. Motor 180 rpm Kg.
2,86	215
3,86	243
4,86	271
5,86	299
6,86	327
7,86	355
8,86	383
9,86	411
10,86	439

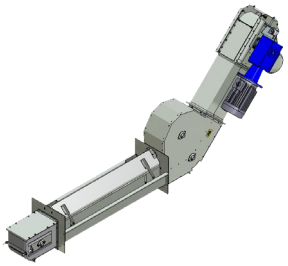

Weight table –T44 (pulley drive)

Complete with pulley drive, 45° bend and inlet trough.

Length in metres	Height / Inclination 1,63m. / 2,05m. Motor 1500 rpm pulley drive 71/355 Kg.
2,86	215
3,86	243
4,86	271
5,86	299
6,86	327
7,86	355
8,86	383
9,86	411
10,86	439

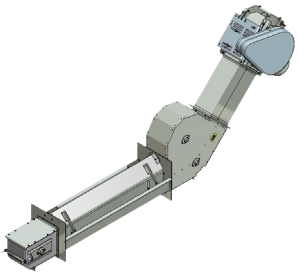

Weight table –T45 (gear motor)

Complete with pinion gear motor, 45° bend and inlet trough.

Length in metres	Height / Inclination
	1,63m. / 2,05m.
	Motor 180 rpm
	Kg.
2,86	260
3,86	294
4,86	334
5,86	368
6,86	402
7,86	436
8,86	470
9,86	504
10,86	538

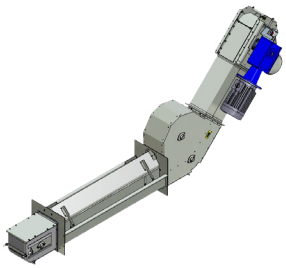

Vægtskema T45 (Kileremtræk)

Complete with pulley drive, 45° bend and inlet trough

Length in metres	Height / Inclination
	1,63m. / 2,05m.
	Motor 1500 rpm pulley drive 71/355
	Kg.
2,86	260
3,86	294
4,86	334
5,86	368
6,86	402
7,86	436
8,86	470
9,86	504
10,86	538

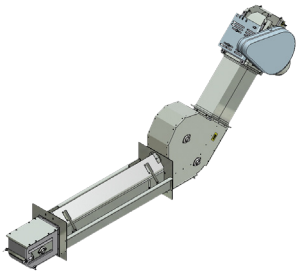

Assembly

Please check the foundation and the travel direction (location of inlet and outlet) before starting the assembly.

It is important to read these instructions carefully before starting the assembly.

Check that there is sufficient space available.

Attention!
Before starting the assembly work, check that the required safety equipment is at disposal, e.g. work gloves, safety footwear, helmet, safety glasses and a lifeline, if necessary. This equipment is not included as standard.

Sealing

All the joints must be sealed with a sealing compound in order to avoid dust and moisture entering at the flange joints.

The sealer must be applied at the flanges inside the holes.

After sealing the joints must be bolted together.

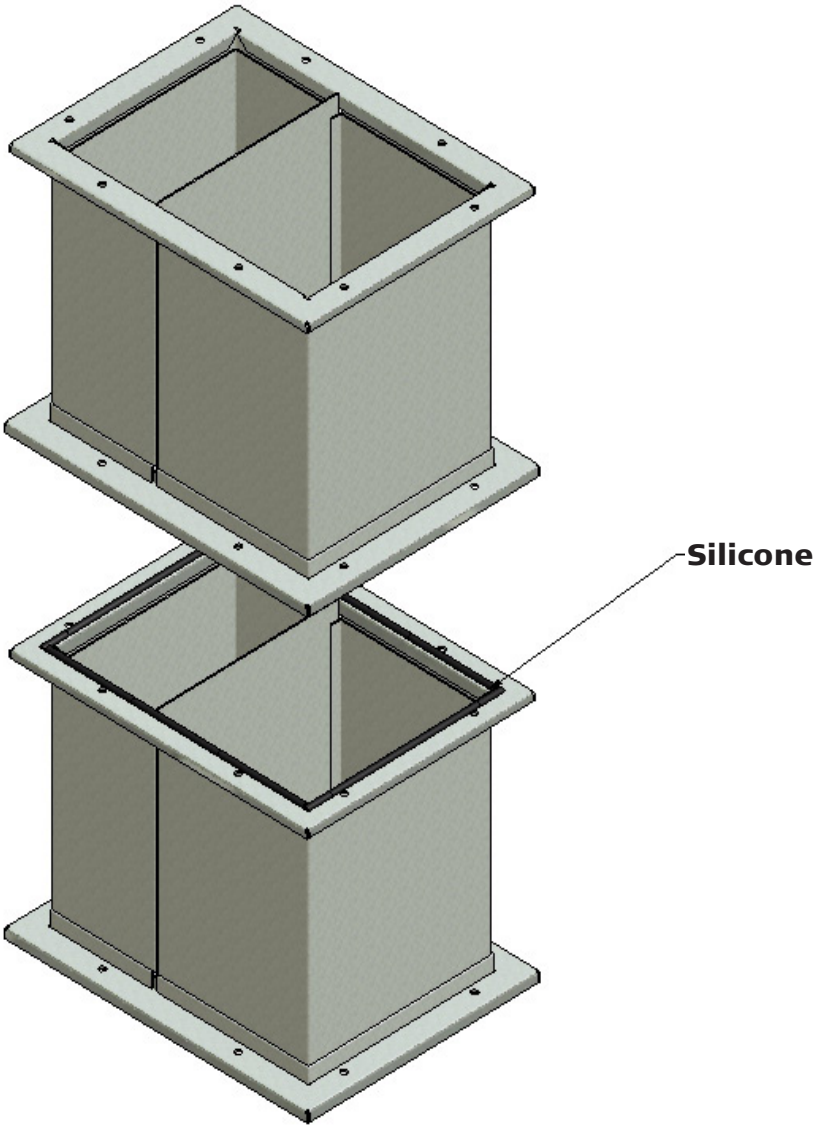

Closed bottom section/Tension section

Fit the extensions to the closed bottom section or to the tension section – remember that the overlapping plate must be facing downward (see drawing).

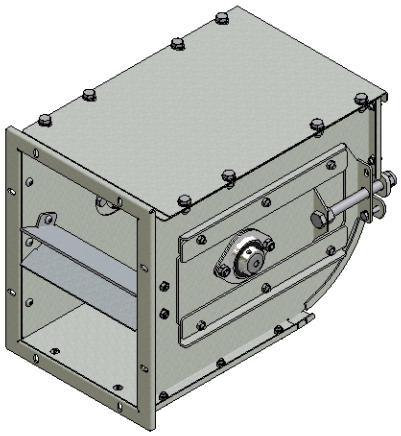

Tension section

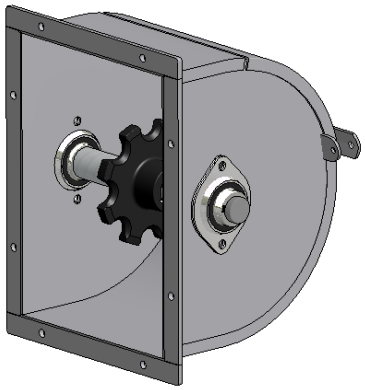

Closed bottom section

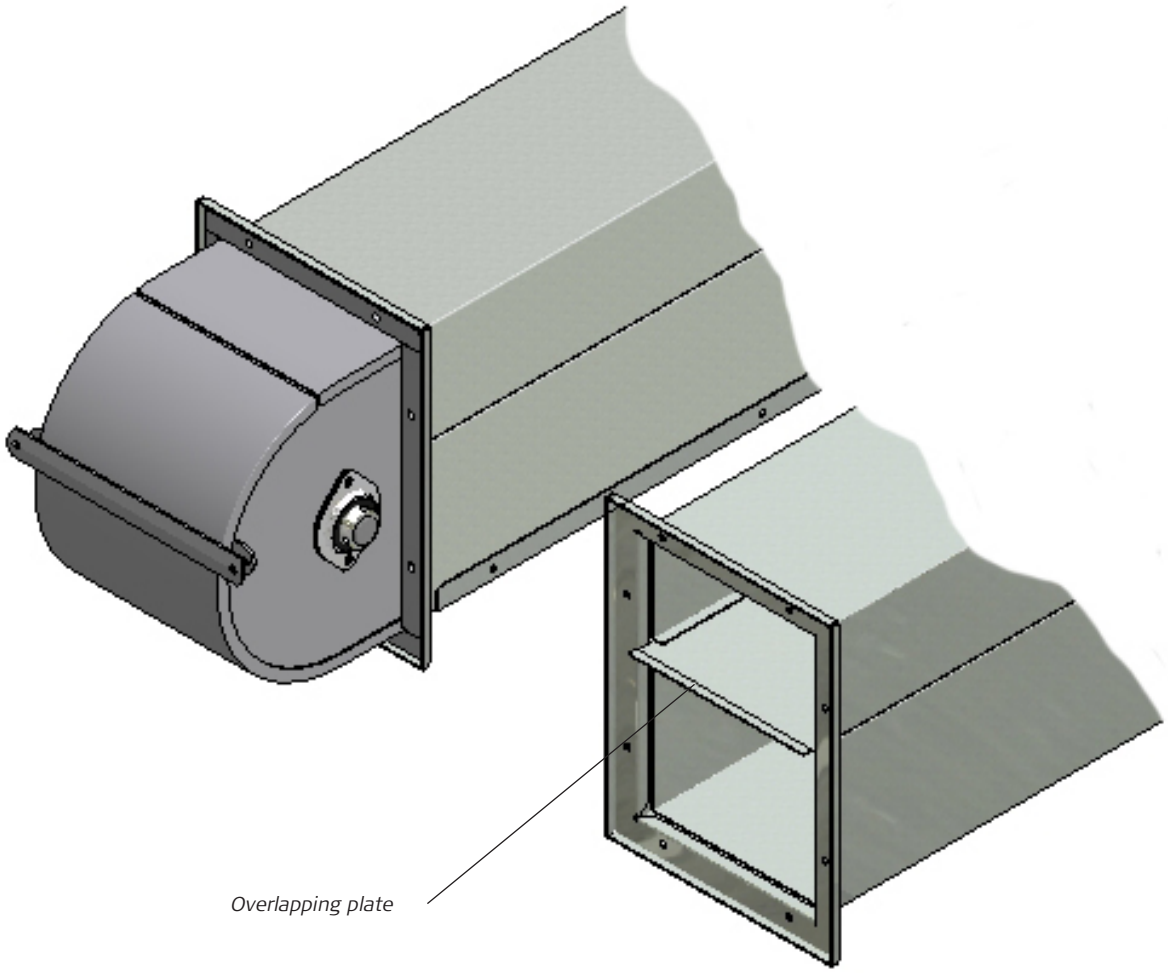

Important!
It is important to fit a tube of min. 850 mm or another type of guard to the inlet and outlet points to prevent entry of hands or fingers into the machine.

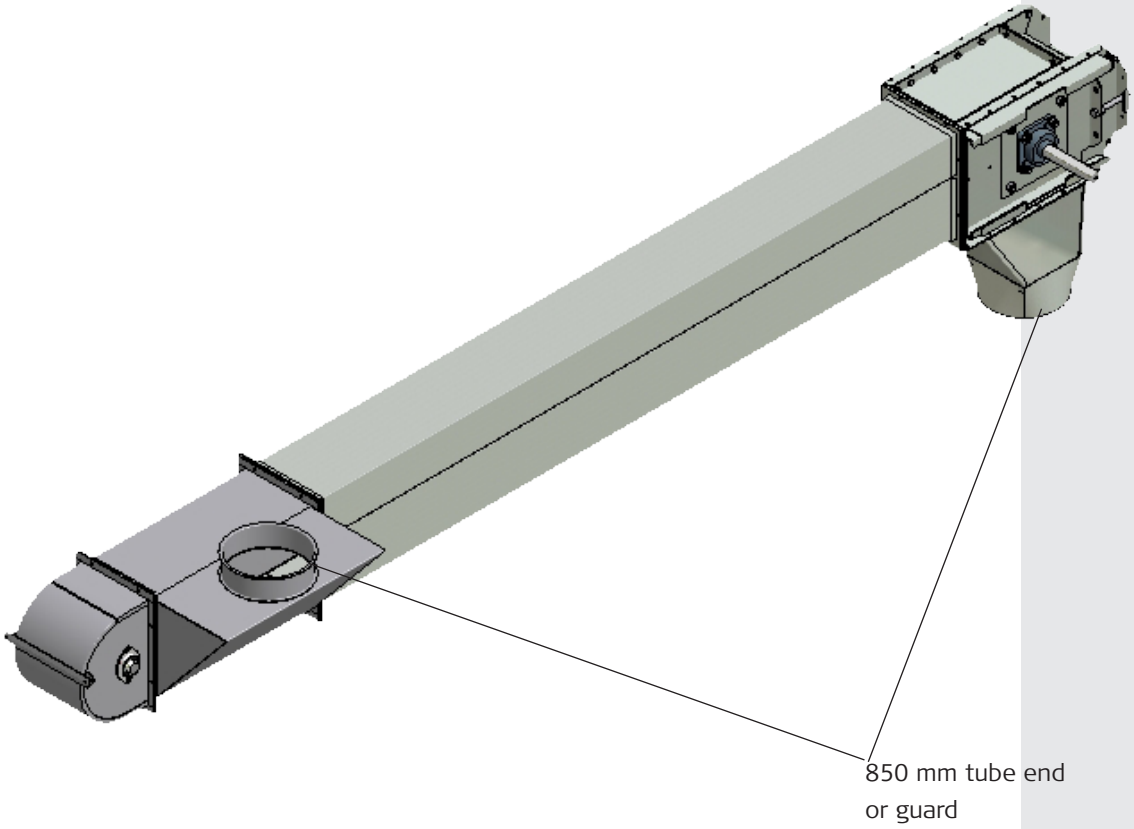

Chain & flight conveyor with intermediate outlet and side outlet

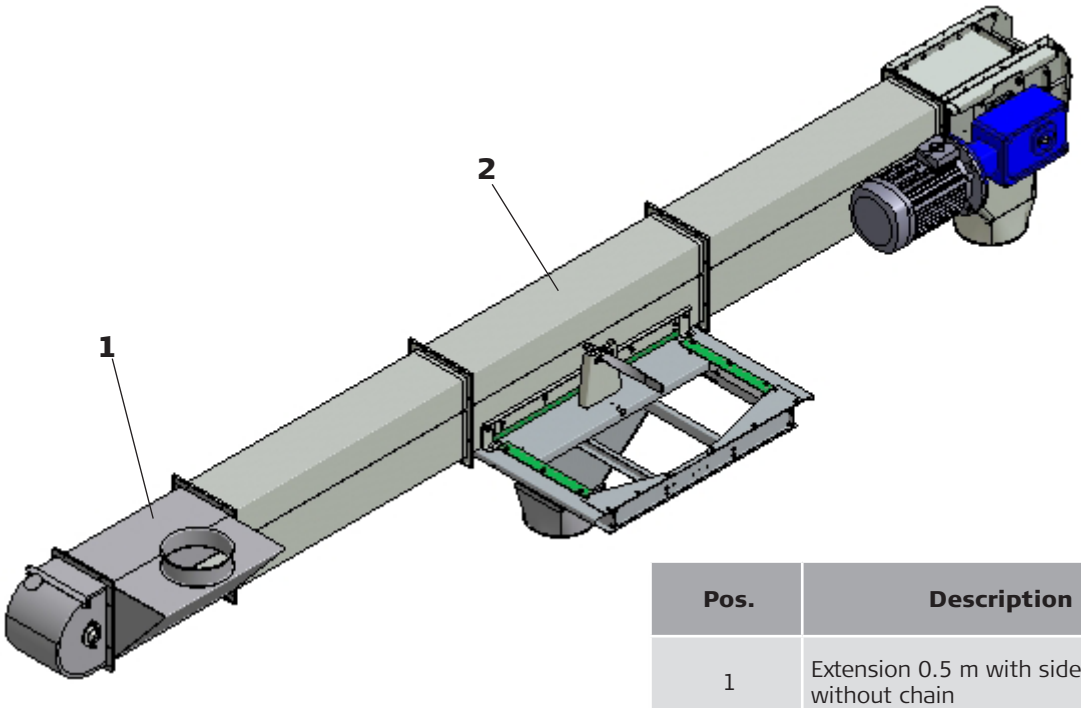

Pos.	Description
1	Extension 0.5 m with side inlet without chain
2	Extension 1.0 m with shut-off valve with brush without chain

Chain & flight conveyor with inlet trough / 45° bend

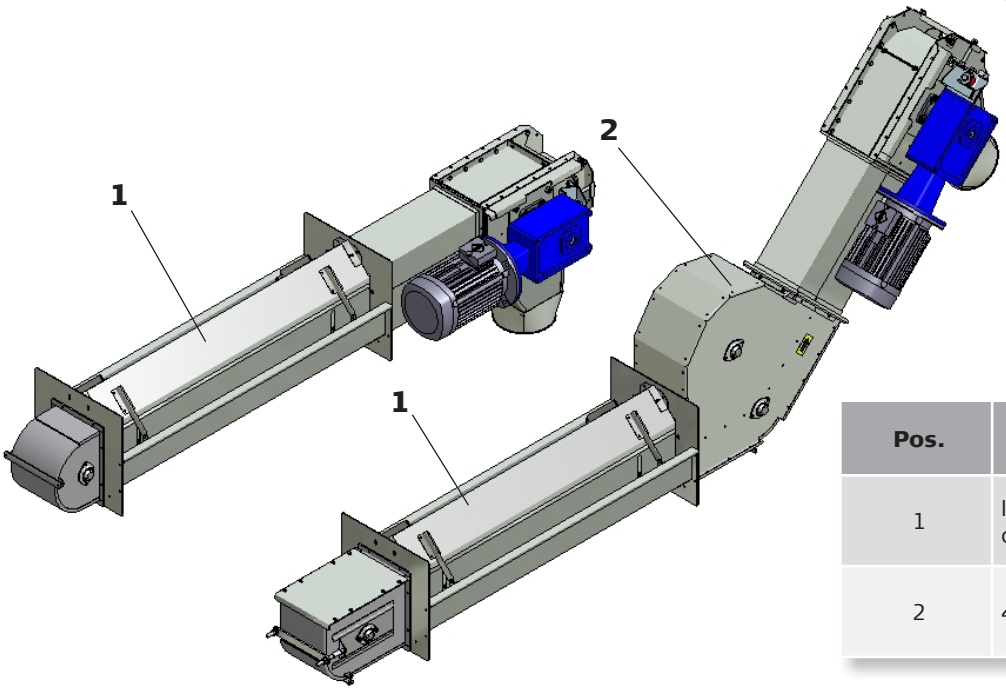

Pos.	Description
1	Inlet trough with return channel without chain
2	45° bend without chain

Gear motor assembly

Fit the motor and gear on the drive shaft (see below drawing).
The engine can be fitted in parallel or traversely on the machine.

Important!
The bleed screw on the gear must always be fitted in the top position.

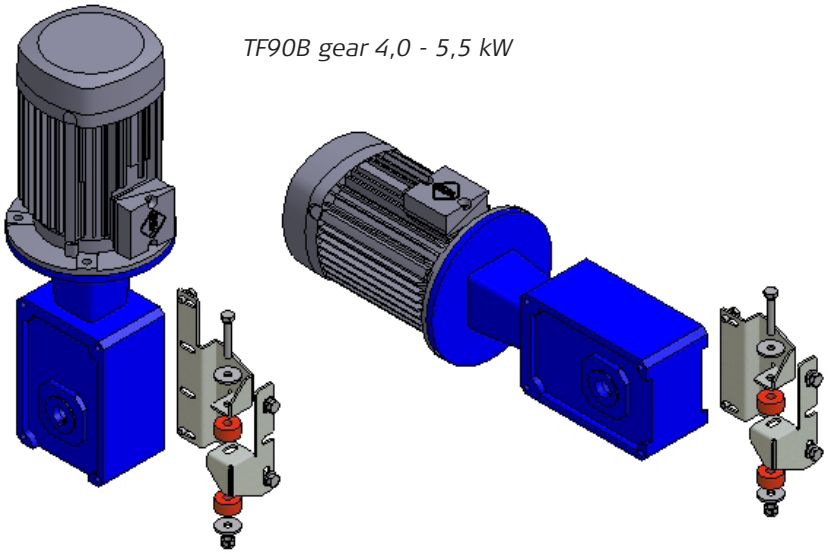

TF90B gear 4,0 - 5,5 kW

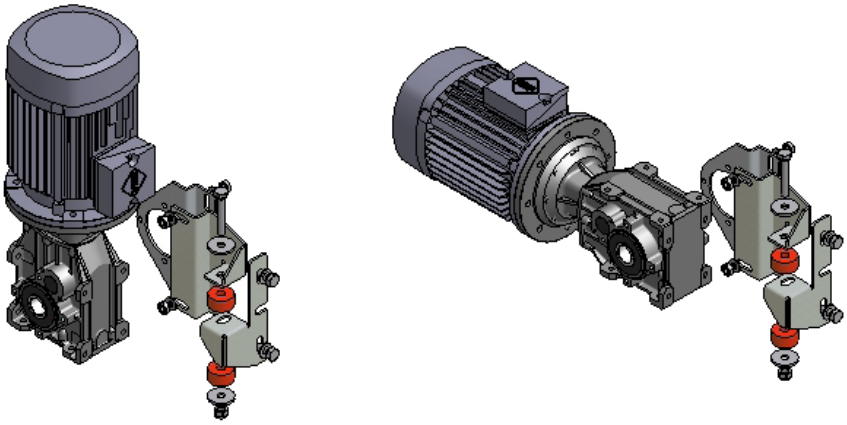

TF63B gear 2,2 - 3,0 kW

For maintenance of motor and gear: please see the attached supplier documentation.

Fitting the motor and pulley drive

- Start by screwing on the motor stand and then fit the internal pulley guard
- Fit the small pulley on the motor shaft and tighten with a screw.
- Fit the engine loosely on the stand with 4 bolts without tightening it, screw the clip bolt and tension bolt on the motor stand, and then fit the large pulley on the drive station shaft and tighten it with a screw (remember the Woodruf wedge).
- Offset the motor in the slotted holes of the support, until the pulley sheaves are parallel. Tighten the motor bolts.
- Move the motor stand towards the conveyor by loosening the tension bolt, and fit the pulleys. Tighten with the tension bolt and the clip bolt.
- Finally fit the external pulley guard.

The belt tensioning is correct when the belt deflection is 10-15 mm (see drawing).

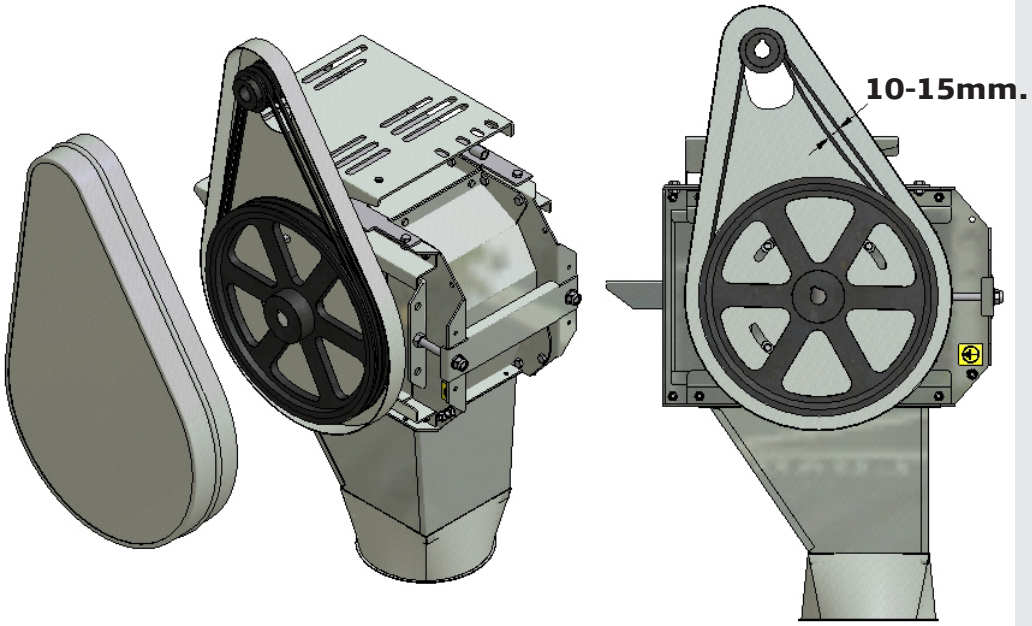

Important!
The belt needs retightening after the first 24 hours, and then according to the maintenance schedule.

NOTE!
Do no use tools to force the pulleys onto the sheaves.

Extensions and inlet trough

The extensions/inlet trough must be fitted in a way that provides sufficient space for later assembly of the chain, as this has to be done through the extension/inlet trough opening/access door.

Fit the extensions/inlet troughs as shown on the drawing (if available).

The conveyor must constantly be supported during the fitting – see section "Attachment".

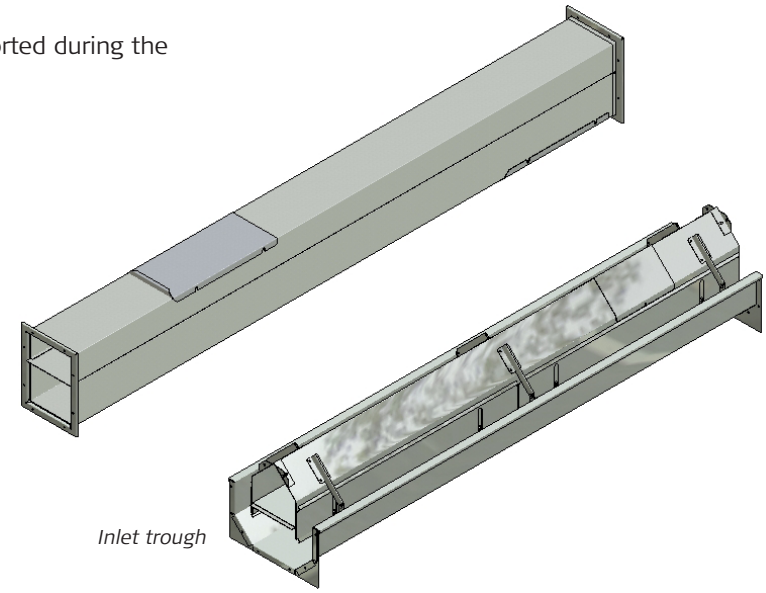

Chain

The conveyor chain is equipped with rubber slats, and the chain must be fitted before the drive station. Assemble the chain with the chain connectors (see drawing) and check the length of the chain (the tension bolts on the drive station must be loose) If required, the chain can be shortened with a thin chisel. Assemble the chain – use only new splits in the connections. Tighten the chain with the bolts on the drive station, and make sure to have a few mm play at the bottom sprocket. Retighten the chain after 30 min.

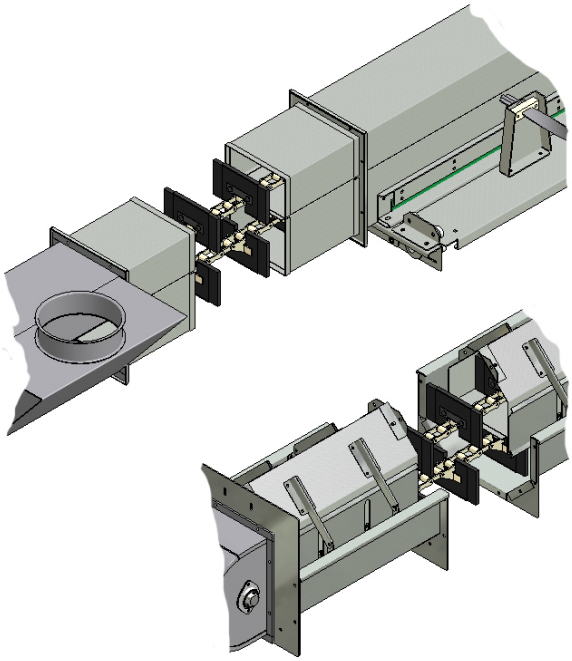

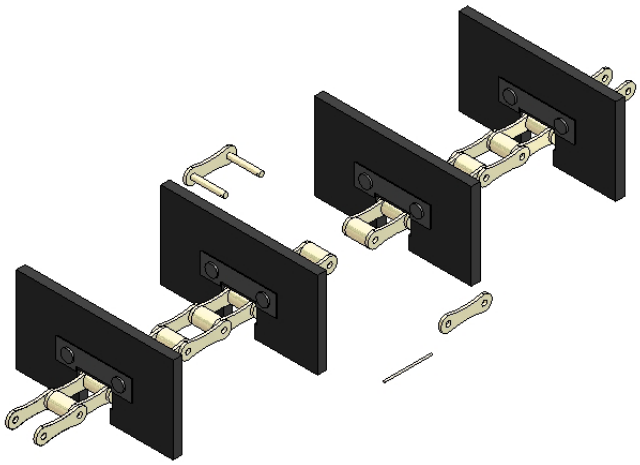

Important!

When fitting and tightening the chain on machines with inclinations there must always be the same distance between the slats (pos. A), and there must be one slat for each 4th. chain link.

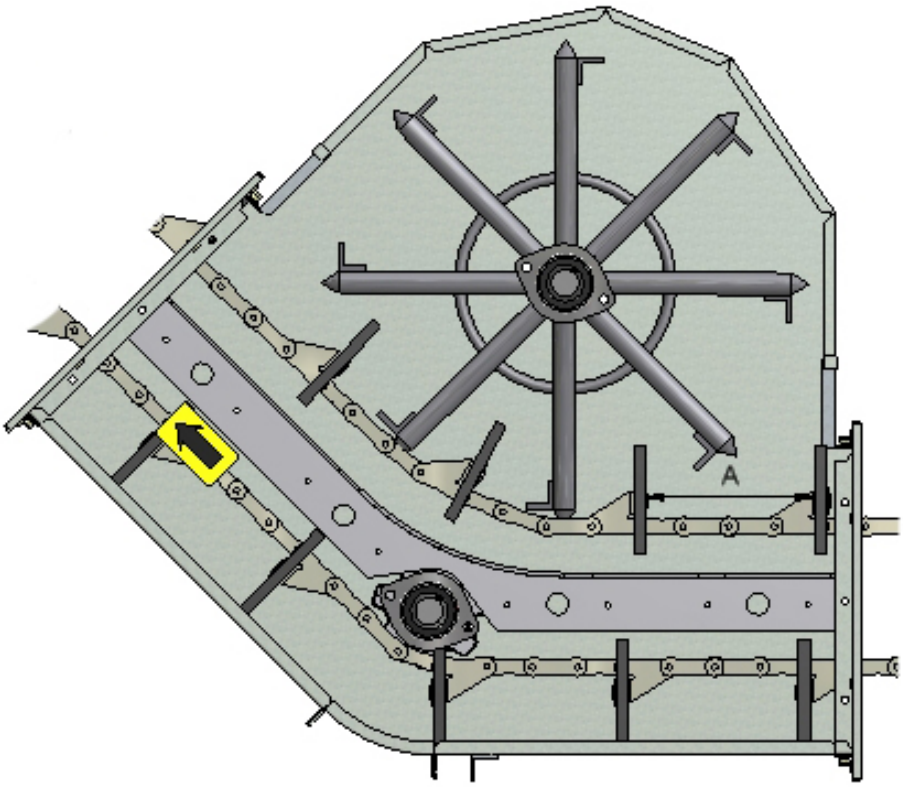

Chain & flight conveyor assembly

Use correct and approved SWL-lifting equipment for the assembly.
Read the section "Upon receipt" before starting the assembly work.

If space allows the easiest way is to assembly the conveyor on the floor either in full length or in separate components.

Any troughs or extensions, fitted with inspection doors, must be equally spaced over the full length of the conveyor.

If troughs or extensions are fitted with an overlapping plate, the plate must be facing away from the drive station in the driving direction.

Fit the extension with the tall transport channel facing downwards, and then fit the respective in- and outlets. Fit the drive station and the bottom part. If inlet troughs are used, they must be fitted with a connecting flange.

Mount the gear motor or the pulley drive at the drive station. The gear motor can be fitted in a cross-machine direction.

The chain conveyor is mounted on the floor in a length between 5-8 meters. The chain in fitted as the last item in the assembly. The easiest way to fit the chain is to remove the top plate in the drive station. The chains are delivered in 10 meter lengths with connecting links.

IMPORTANT! Pull a rope or wire through all the extensions, both the lowest and the top side in order to mount the chain later.

Place the chain correctly in the sprocket wheel and short up the chain in the in the desired length.
The chain is assembled and tightened via the bolts at the drive station or/ and the tightening section.

The chain is tightened until the rubber slats are standing vertical in the full length of the conveyor.

IMPORTANT!
Remember to remount all the inspection covers after assembling the chain.

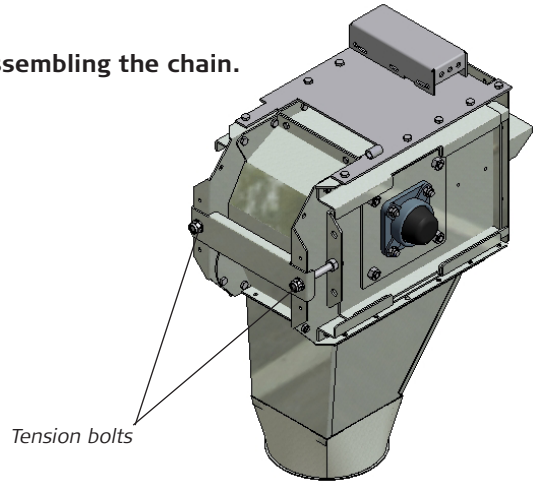

Potential adjustment

The potential adjustment must be carried out according to the current regulations.

A label on the drive station indicates the point of the belt conveyor potential adjustment.

The label indicates the potential adjustment point for the belt conveyor.

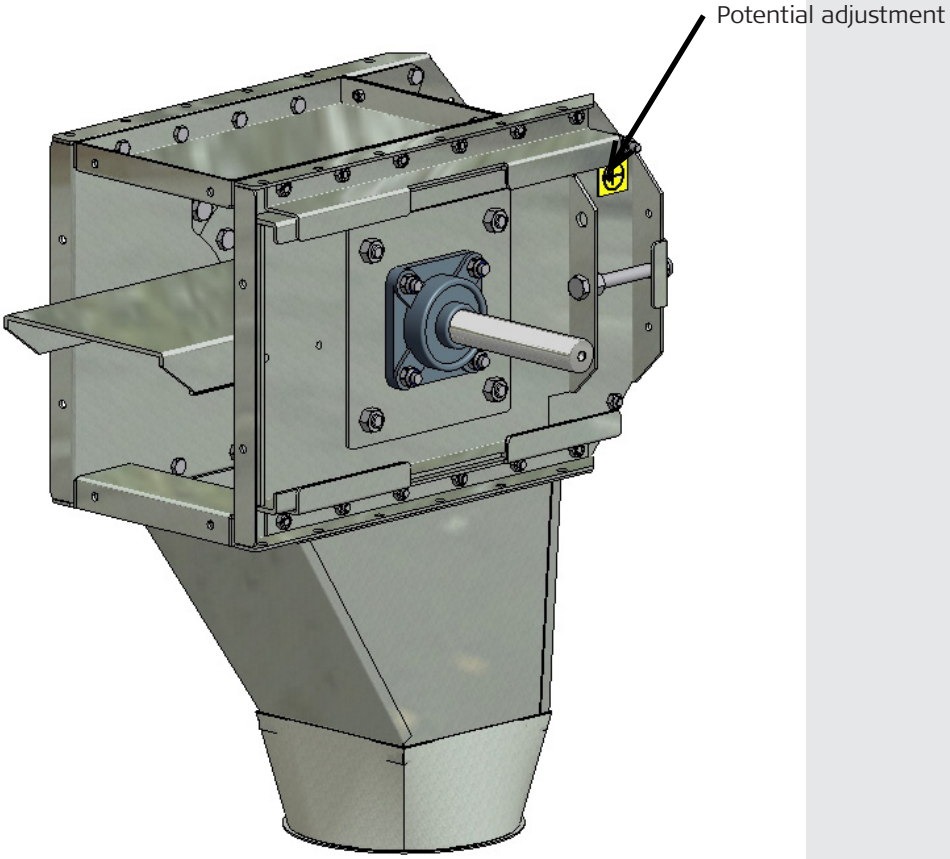

Attachment

In order to obtain the maximum stability, it is important to secure the belt conveyor properly. There must be a distance of maximum 5.0 m between the fixation points. If the distance is greater, it is necessary to use wire suspention.

Regarding the wire suspension for conveyors, there are various possibilities – see drawings below.

Wire suspension – double with side guides

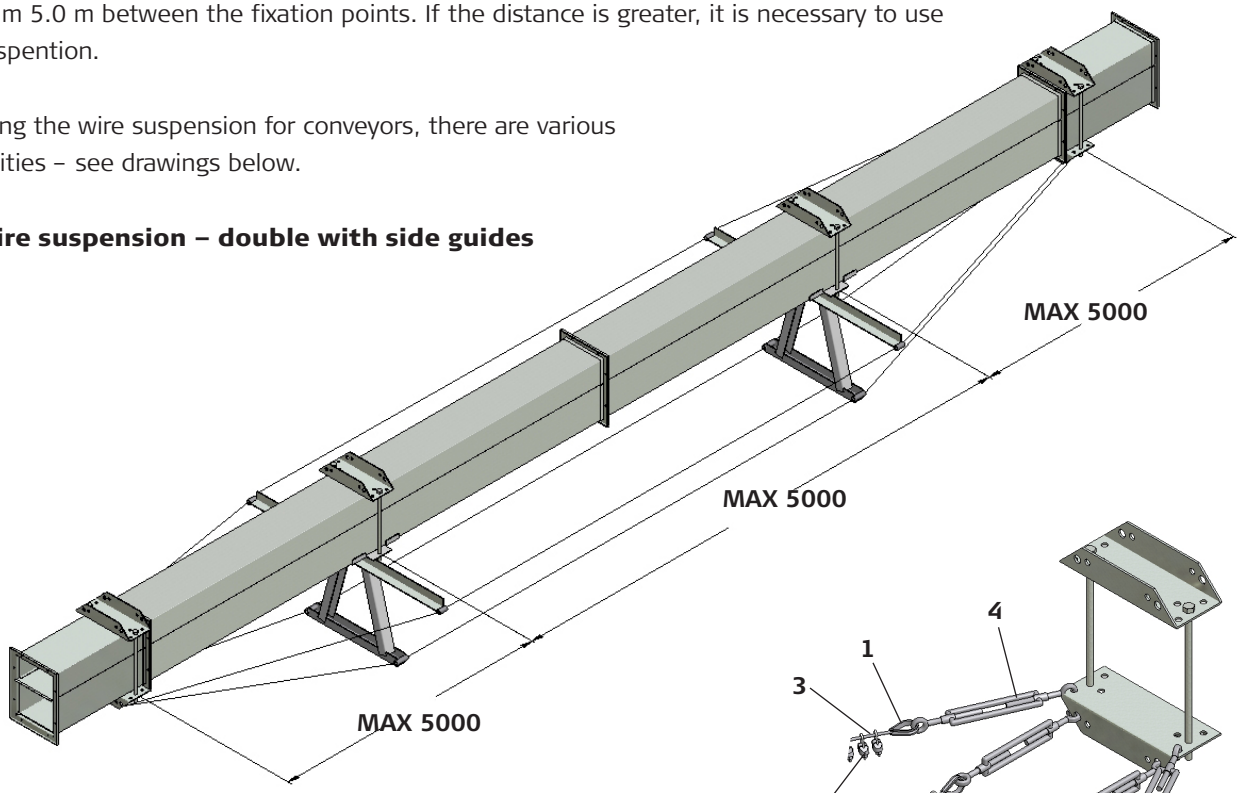

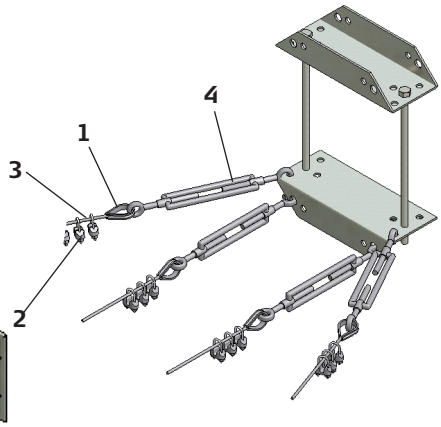

Wire suspension – single with side guides

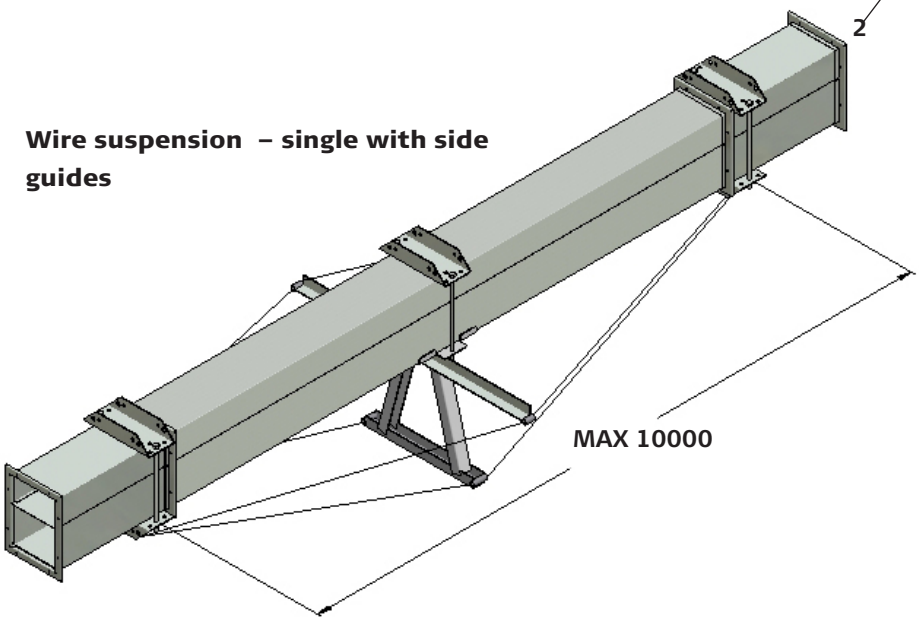

Pos.	Description	T20	Kg.	T40	Kg.
1	Wire thimble for 8mm wire	92112	0,032	92112	0,032
2	Wire rope clips for 8mm wire	92113	0,032	92113	0,032
3	Wire 8mm (weight per m.)	92114	0,194	92114	0,194
4	Wire idler for 8mm wire	92115	0,400	92115	0,400

Wire suspension – double

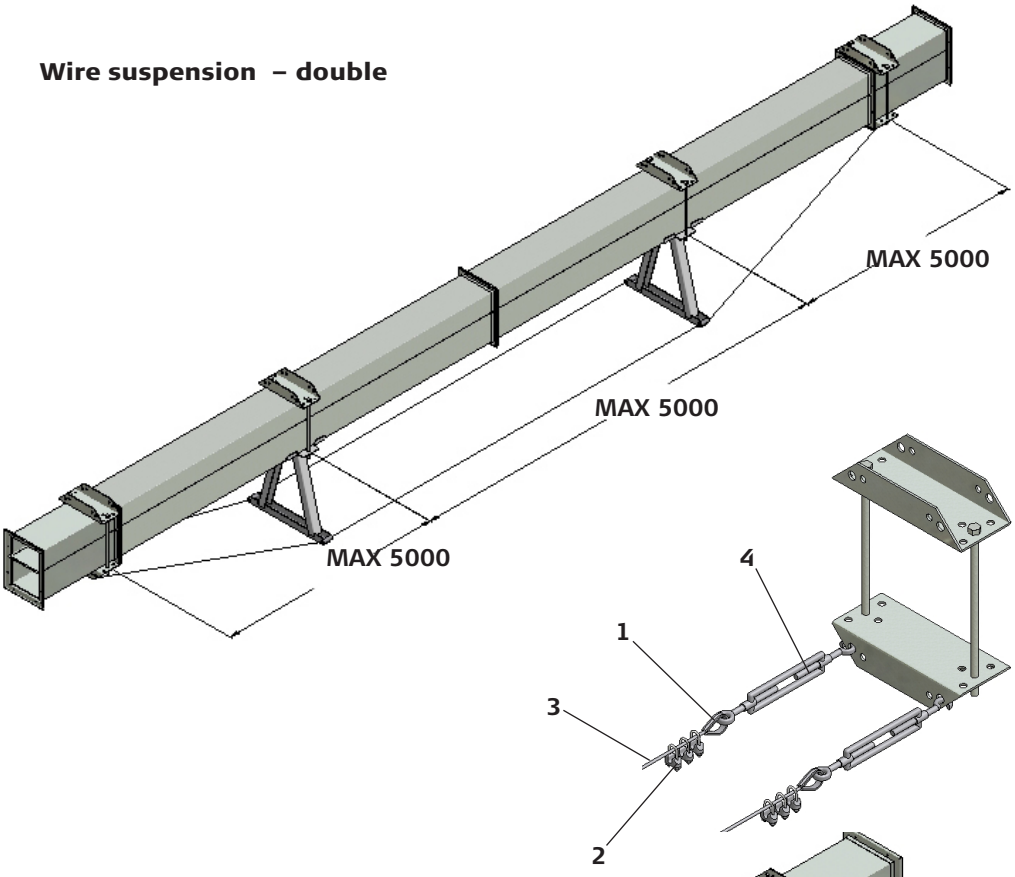

Wire suspension – single

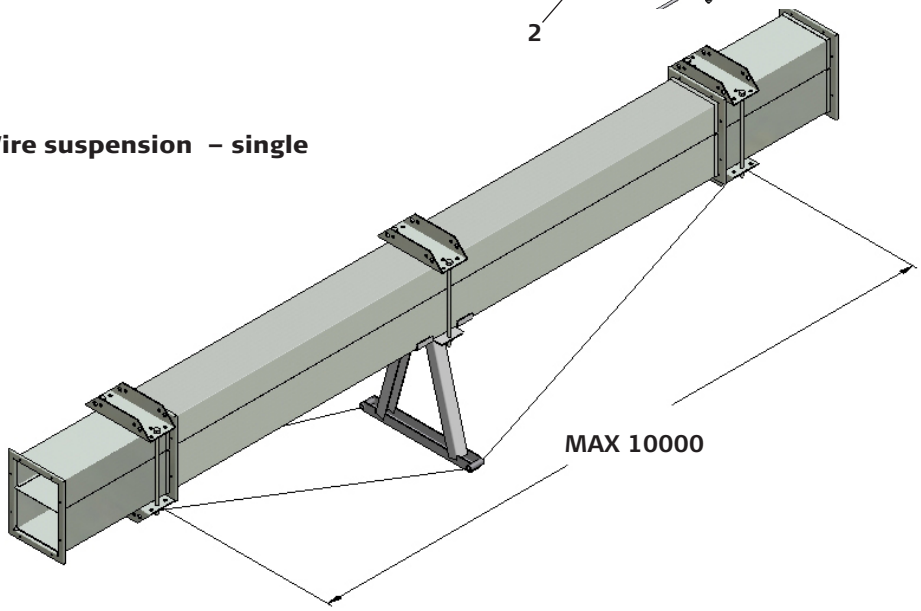

Pos.	Description	T20	Kg.	T40	Kg.
1	Wire thimble for 8mm wire	92112	0,032	92112	0,032
2	Wire rope clips for 8 mm wire	92113	0,032	92113	0,032
3	Wire 8mm (weight per m.)	92114	0,194	92114	0,194
4	Wire idler for 8mm wire	92115	0,400	92115	0,400

Starting up

Before starting to work with the chain & flight conveyor, please check that:

- All inspection doors are fitted
- No work is carried out on/near the machine.
- The motor rotation direction is correct.
- All conveyor bolts are correctly fitted and tightened.
- The chain is correctly fitted and adjusted.
- The attachment and stability of the conveyor is correct.
- Check after start that no joints are leaking.
- If fitted, check for correct tension of the pulley.

Conveyor stops – fault finding

In case of stops, check first whether the conveyor is able to start again, when the relay has gone cold. If yes, the fault is either caused by low adjustment of the relay or lack of motor capacity.

If the conveyor is still not able to start without being emptied of material, it must be checked whether the return tube (downward passage) on the conveyor is filled with material in the first section (open the inspection door). In this case the fault is due to blockage of the conveyor drain (drain tubes too small or insufficient slope) or caused by stops further along in the transport system.

Maintenance

Please see the maintenance summary and the attached supplier documentation for cleaning- and maintenance intervals.

Warning!

- During cleaning and maintenance work, the electric supply for the chain & flight conveyor must be disconnected and secured against accidental reconnection.

- After repair and maintenance the inspection doors and shields must be refitted before the work is continued.

Use original parts only

In case parts that original parts are not used, the warranty becomes void, and JEMA AGRO A/S can no longer be held liable for the EU Declaration of conformity.

Gear motor

Check the gear as described in the attached supplier documentation.

Important!
Check that the bleed screw is fitted in the top position on the gear.

Motor

Bearing noise from the motor: please see the attached supplier documentation.

Motor inspection: please see the attached supplier documentation.

Retorque the motor as indicated in the maintenance summary. Please see the assembly guidance for instructions.

Pulley kit

Check the belt tension intervals as indicated in the maintenance summary.

Check for cracks in the side of the belts. Replace if necessary.

Note!
Do not mix old and new belts.

Chain

Check that the chain tension is correct.

See drawing for correct procedure.

IMPORTANT! When tightening the chain, loosen the torque arm.

See inspection intervals in the maintenance summary.

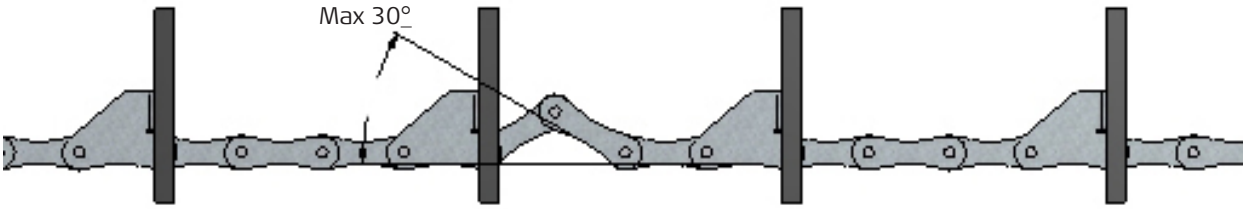

Rubber slats

Defective or worn rubber slats must be replaced.
See the maintenance summary.

Bearings

Check the bearings for wear/play, and lubricate as described in the maintenance summary.

Check for wear/play by lifting up the shaft and control manually.
Make sure that there is no water in the pit, as this will damage the bearings in the drive station/bottom section.

Lubrication of bearings

Important!
It is extremely important to use the correct amount of grease, as too much will damage the sealing of the bearing, which will result in leaks and subsequent overheating of the bearing.

Check the amount of grease per grease gun stroke.

Closed bottom section and tension section

Lubricate and exchange the bearings as described in the maintenance summary.

Drive station

Lubricate and change the two drive station bearings as described in the maintenance summary.

Leaks

All leaks must be repaired immediately.

Nose and vibrations

Stop the chain & flight conveyor immediately and identify the problem.

Disposal

The methods of disposal must comply with the current local regulations.

Warning!
The electric supply to the motor must be disconnected during the disassembly.

Disassemble the conveyor on the floor, if space allows, following the reverse order of the assembly procedure.

If the chain & flight conveyor is disassembled at the premises, start by detaching the motor. For conveyors with pulley drive, the pulley must be removed first, then motor, the large pulley sheave and finally the guard.

The easiest way to remove the chain is to dismantle the joint at the bottom of the conveyor and then pull out the chain through the bottom inspection door. Finally remove all extensions.

The chain & flight conveyor contains various materials that can be reused. All metal parts should be delivered to a recycle industry.

Options/accessories

Drive station outlet

Inclination from 0° to 10°:

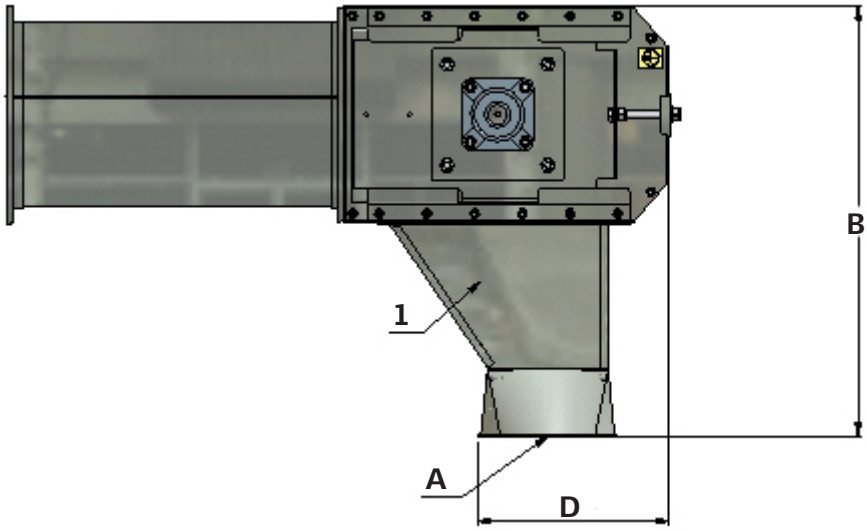

Pos.	Description	T20	Kg.	T40	Kg.
1	Outlet trough for drive-/tension section 90°	44247	4,500	45247	5,000

Inclination from 10° to 45°:

Pos.	T20	T40
A	Ø200	Ø200
B	650	650
C	440	440
D	330	330

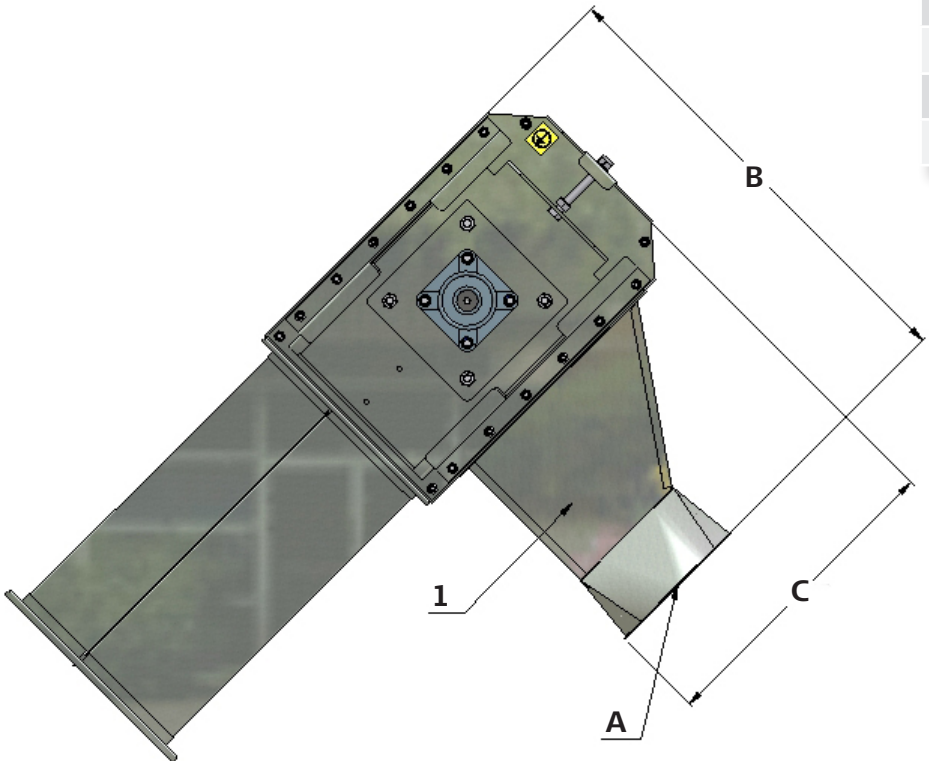

Options/accessories

Shut-off valve

1. Shut-off valve for drive-/tension section.

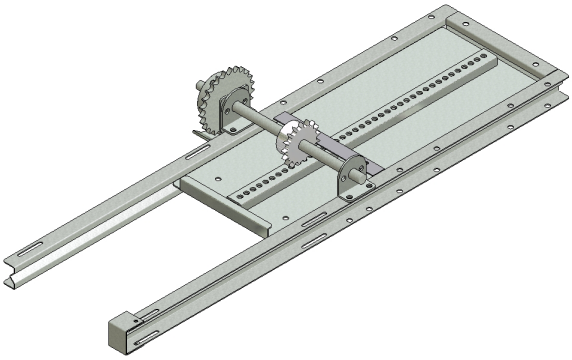

2. Shut-off valve with 2 end stops for drive-/tension section.

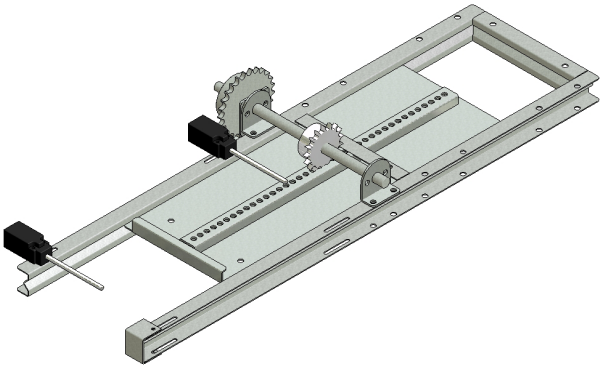

3. Shut-off valve for drive-/tension section with motor 0.12 kW and 2 end stops.

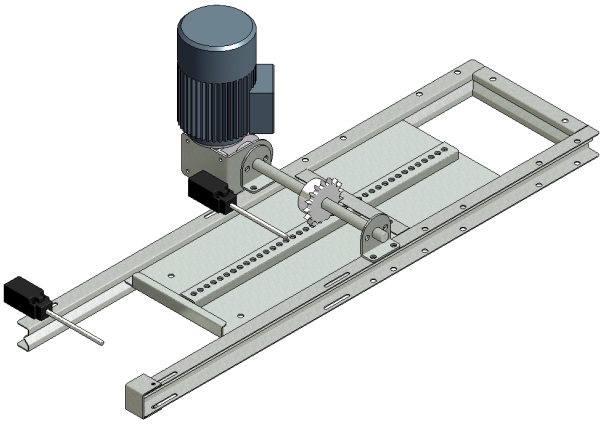

Pos.	Description	T44	Kg.	T45	Kg.
1	Shut-off valve for drive-/tension section	44026	7,0	45026	8,3
2	Shut-off valve with 2 end stops for drive-/tension section	44098	7,2	45098	8,5
3	Shut-off valve for drive-/tension section with motor and 2 end stops	44044	17,9	45030	19,2

Extensions

1. Trough kit with cover for 0.5 m inlet trough

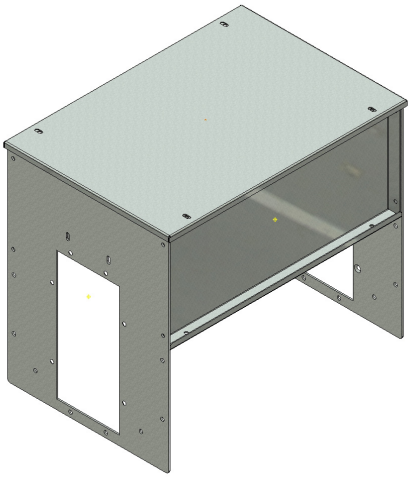

Pos.	Description	T44	Kg.	T45	Kg.
1	Trough kit with cover for 0.5 m inlet trough	44024	12	45024	13

Intermediate outlet

Extension 1.0 m with shut-off valve and brush without chain, can be combined with different outlet troughs and control systems.

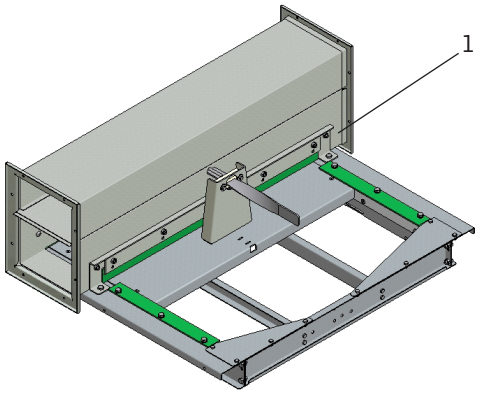

Outlet troughs

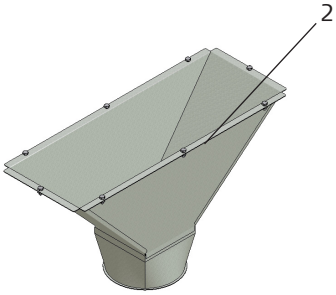

Control systems

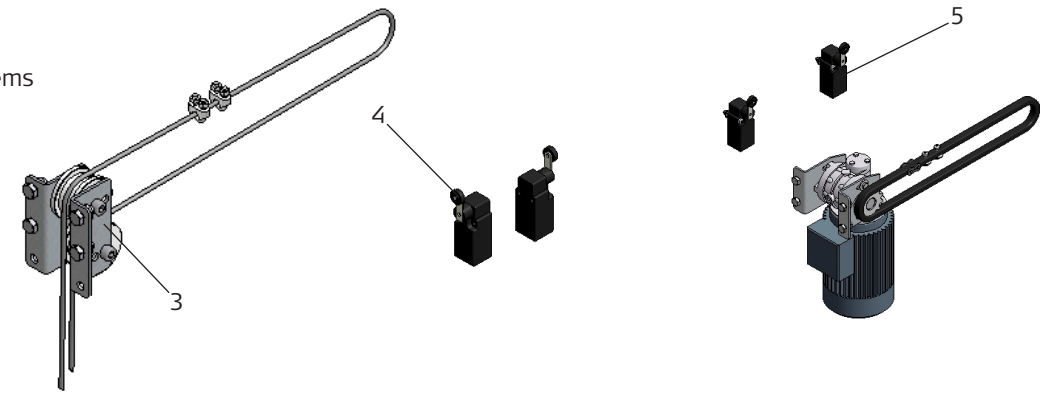

Pos.	Description	T44	Kg.	T45	Kg.
1	Intermediate outlet with 1,0 m extension.	44101	35,10	45101	37,20
2	Outlethopper SK200 for intermediate outlet.	44102	6,60	45102	7,08
3	Manual pull for intermediate outlet.	45105		45105	
4	2 end stops fitted on intermediate outlet	88115	0,16	88115	0,16
5	Motor 0.12 kW with limit stop for intermediate outlet	45104	6,0	45104	6,0

Wire suspension

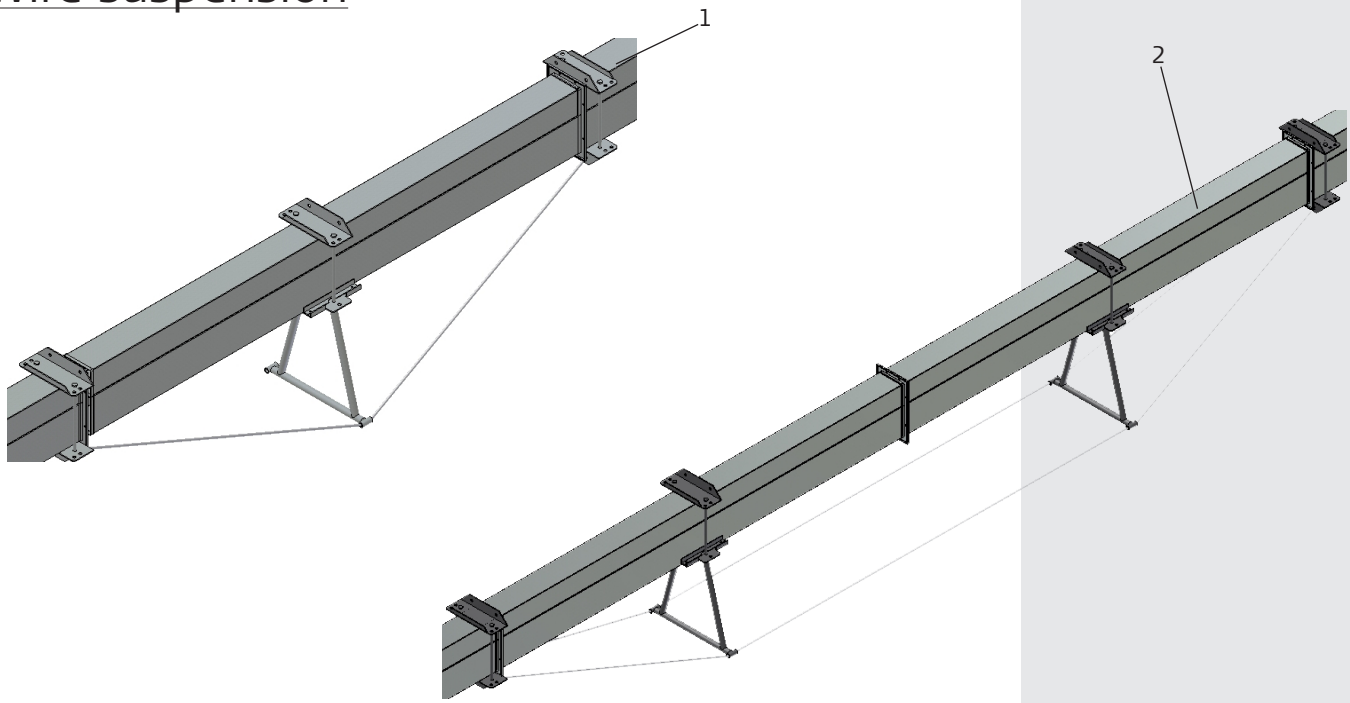

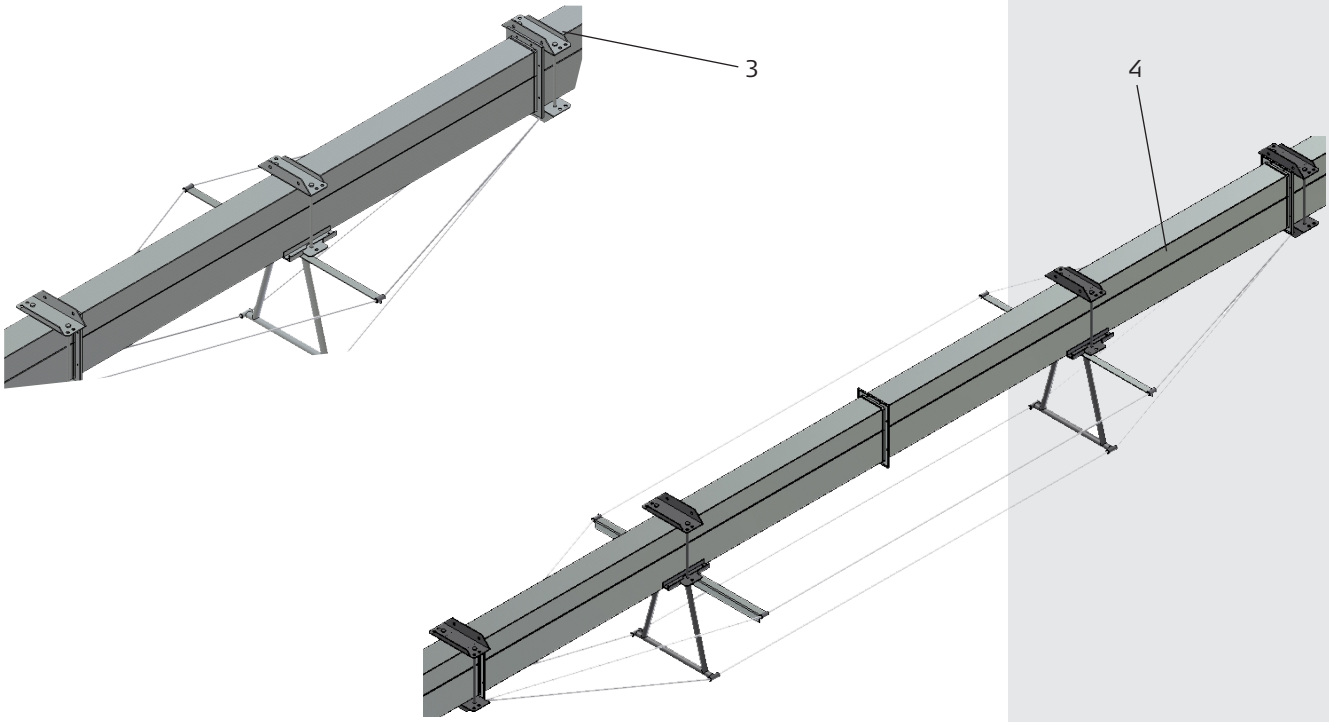

Pos.	Description	T44	Kg.	T45	Kg.
1	Wire suspension, single with 21 m wire for 10 m suspension	00046	25,0	00046	25,0
2	Wire suspension, double with 31 m wire for 15 m suspension	00047	32,0	00047	32,0
3	Wire suspension, single with 44 m wire and side guide for 10 m suspension	00048	38,0	00048	38,0
4	Wire suspension, double with 64 m wire and side guide for 15 m suspension	00049	43,0	00049	43,0

Cover

1. Cover for 1 m extension with outlet

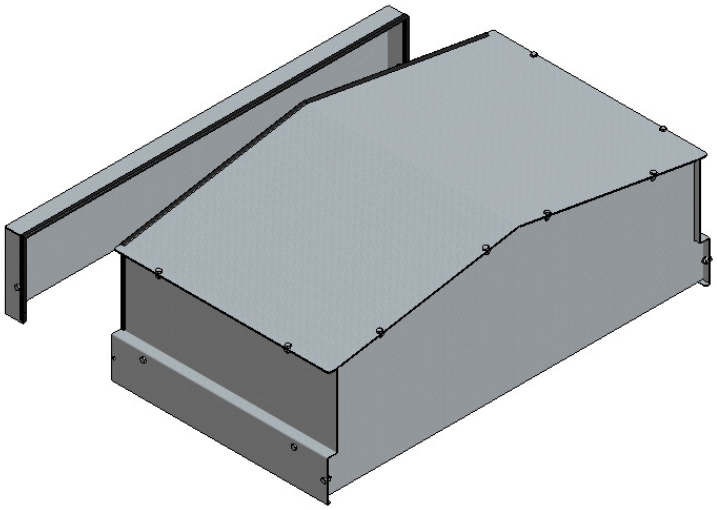

2. Tarpaulin cover for drive station

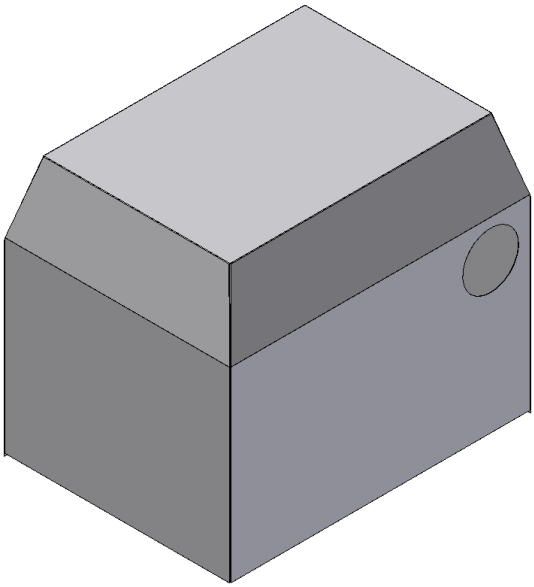

Pos.	Description	T44	Kg.	T45	Kg.
1	Cover for 1 m extension with outlet	45132	30,0	45132	30,0
2	Tarpaulin cover for drive station with pulley kit	51090	3,0	51090	3,0
3	Tarpaulin cover for drive station with pinion gear motor	51091	3,0	51091	3,0

DryPit

Separate fitting instructions attached.

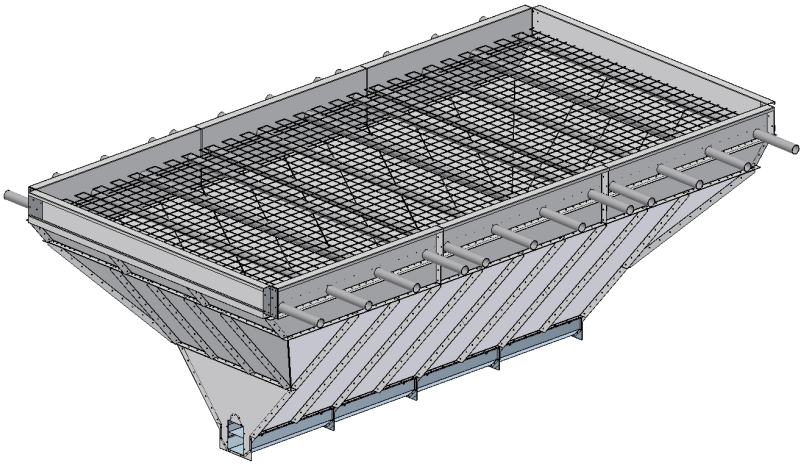

Discharge box

Separate fitting instructions attached.

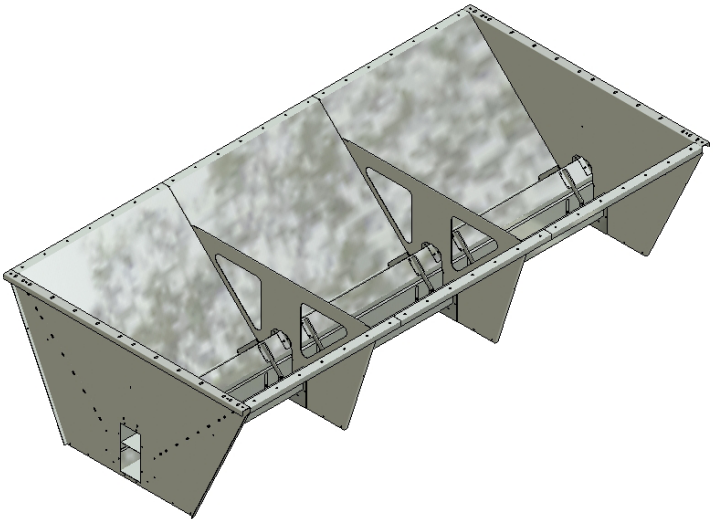

Parts T44/T45

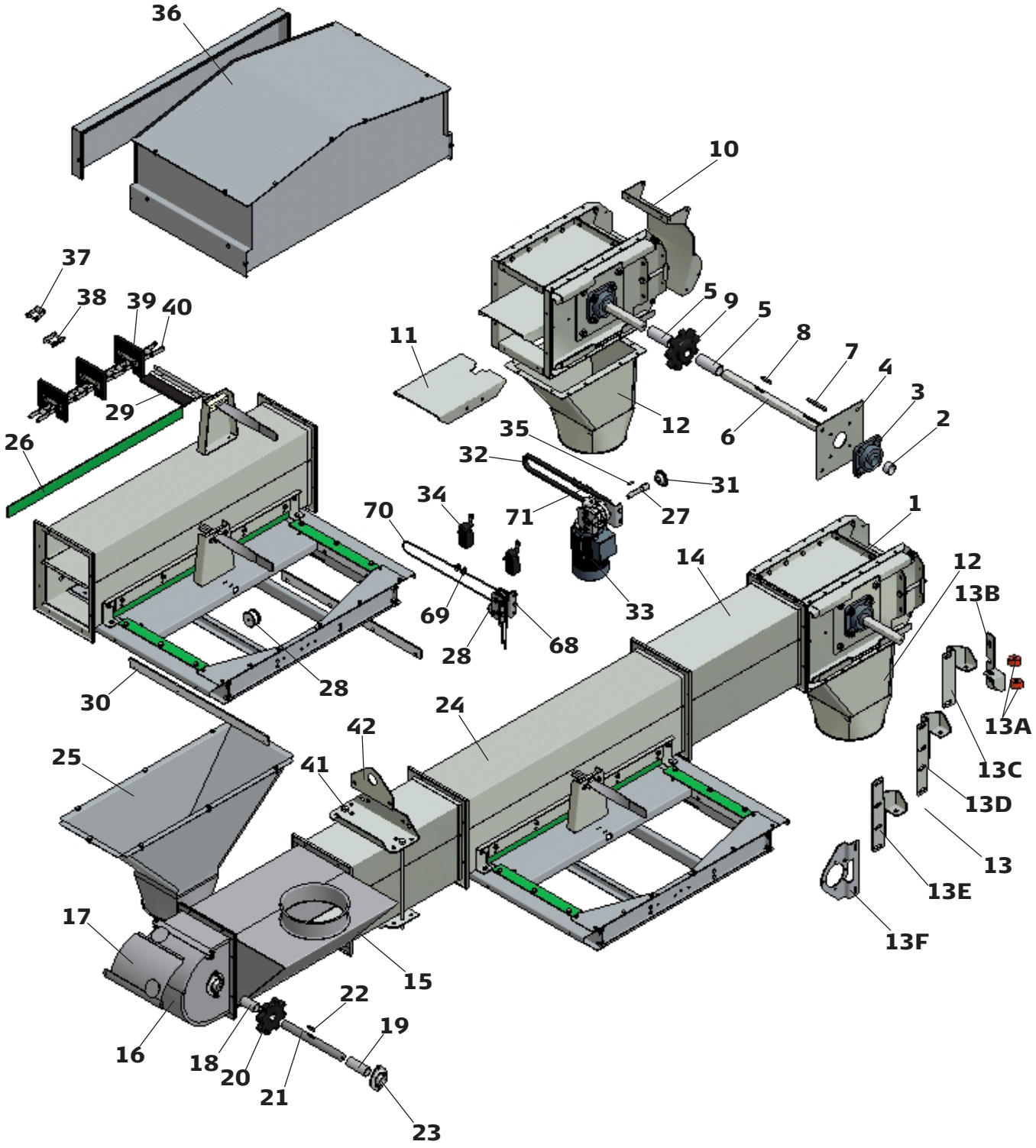

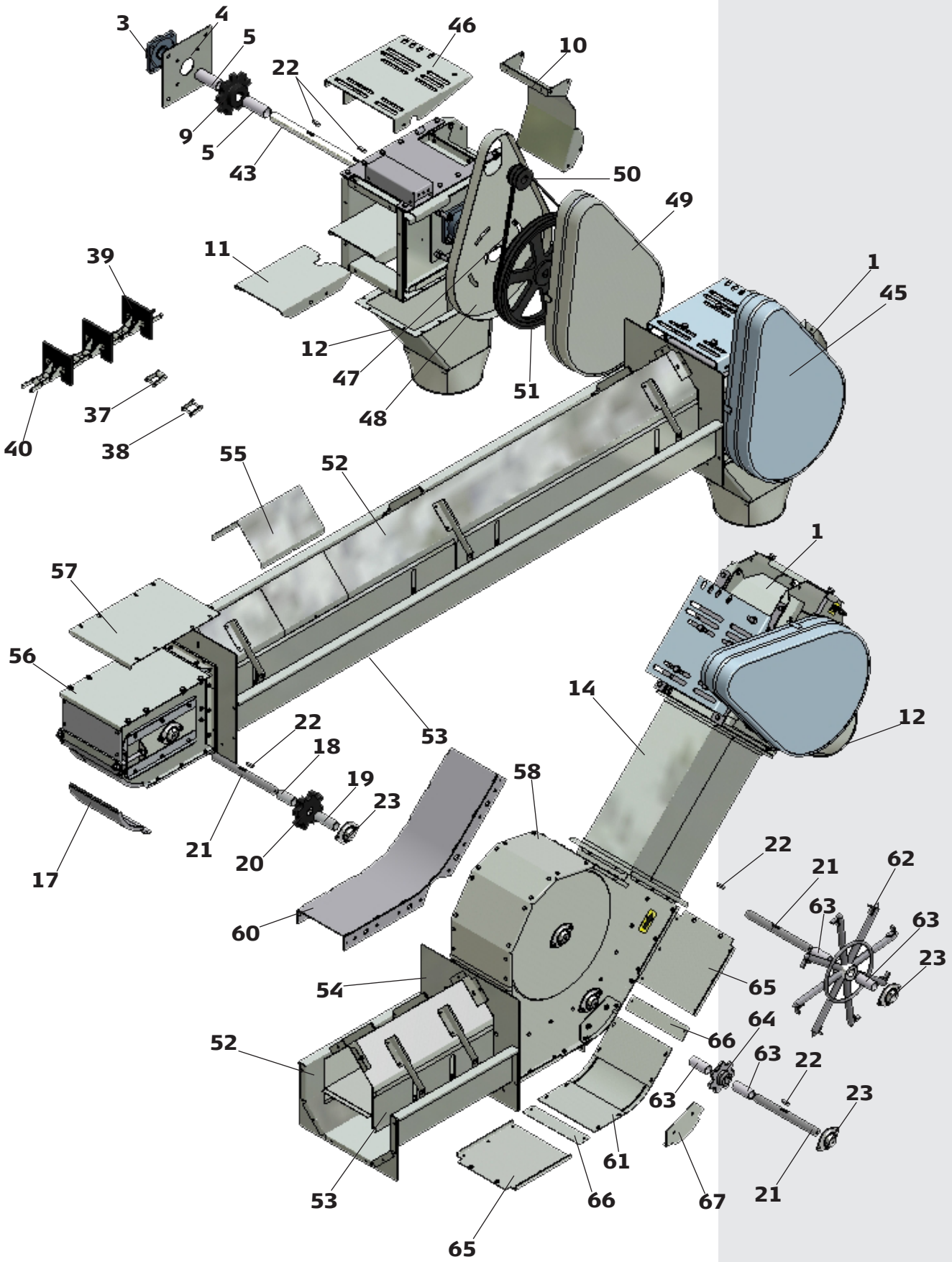
3
4
5
46
10
22
9
5
43
50
49
39
11
1
45
12
47
51
48
37
40
38
55
52
1
57
56
14
12
22
18
53
19
58
23
21
20
17
22
21
62
63
63
23
60
54
65
64
66
52
63
22
63
23
61
53
66
67
21
65

Parts list T44/T45

Pos.	Description	T20	Kg.	T40	Kg.
1	Drive station without chain for pinion gear motor 2.2-5.5 kW, RHS	51583	36,00	52483	39,00
	Drive station without chain for pinion gear motor 2.2-5.5 kW, LHS	51585	36,00	52485	39,00
	Drive station without chain for pulley drive	51577	36,00	52116	39,00
2	Spacer d30 for drive station with pinion gear motor	51581	0,03	51581	0,03
3	Bearing UCF 206, 30 mm	85130	1,20	85130	1,20
4	Bearing plate for elevator head	51066	0,80	51066	0,80
5	Space for elevator head	20017	0,08	40017	0,13
6	Shaft d30 for elevator head with pinion gear motor	51580	2,00	52120	2,40
7	Feather key 8x7x80 mm	87066	0,04	87066	0,04
8	Feather key 8x7x40 mm	87065	0,07	87065	0,07
9	Sprocket 9 Z for elevator head d30	83026	1,80	83026	1,80
10	Shroud for elevator head	51564	1,70	52105	2,25
11	Adjustable intermediate plate for elevator head	51570	1,70	52108	2,20
12	Outlet trough 90° for drive-/tension section SK200	44247	4,50	45247	5,00
13	Torque arm for pinion gear motor TF90B/TF63B parallel/crosswise of extension	81319	5,00	81319	5,00
13A	Rubber bush for torque arm Ø40/14 x 20 for pinion gear motor	91520	0,03	91520	0,03
13B	Torque arm, part for tightening plate	81326	0,50	81326	0,50
13C	Torque arm, part for pinion gear motor	81327	0,70	81327	0,70
13D	Torque arm, part for conical wheel gear, 90° RHS	81321-1	0,85	81321-1	0,85
13E	Torque arm, part for conical wheel gear, 90° LHS	81321	0,85	81321	0,85
13F	Bracket for Torque arm, TF63B	81330	0,54	81330	0,54
14	Extension 2.5 m with door, without chain galv.	51012	35,00	52012	37,00
	Extension 2.5 m without chain galv.	51021	35,00	52021	37,00
	Extension 2.0 m without chain galv.	51022	28,00	52022	32,00
	Extension 1.0 m without chain galv	51024	14,00	52024	16,00
	Extension 0.5 m without chain galv	51025	7,00	52025	8,00
	Extension 0.25 m without chain galv	51026	3,00	52026	5,00
	Extension 0.125 m without chain galv	51027	2,00	52027	3,00
15	Extension 0.5 m w/side inlet SK 200 without chain galv.	44130	10,50	45130	12,00
16	Elevator base closed without chain galv.	51231	6,60	52231	7,30
17	Inspection door for tension section/closed elevator base	20005	0,53	40005	0,74
18	Bush for elevator base, short d26 x 25/d26 x 58	20038	0,02	40038	0,06
19	Bush for elevator base, long d26 x 48/d26 x 78	20039	0,05	40039	0,08
20	Sprocket 8 Z for elevator base d25	20036	1,10	20036	1,10
21	Shaft for tension end / bend	20230	0,70	40230	1,00
22	Feather key 8x7x30mm	87079	0,02	87079	0,02
23	Bearing with flange UCF/PFL, 205, 25 mm	85100	0,30	85100	0,30
24	Intermediate outlet without extension	44101	35,10	45101	37,20
25	Outlethopper SK200 for Intermediate outlet	44102	6,60	45102	7,08
26	Nonfric wear rail for 1.0 m extension with outlet	91503	0,14	91503	0,14
27	Drive shaft for intermediate outlet	45104-2	0,12	45104-2	0,12
28	Roller for pull, intermediate outlet	45100-10	0,03	45100-10	0,03
29	Brush for 1.0 m extension with outlet	44128	0,05	45128	0,07
30	Slide rail for intermediate outlet, PEHD1000	44100-8	0,03	45100-8	0,03

Pos.	Description	T20	Kg.	T40	Kg.
31	Sprocket wheel 12 Z 1/2" Ø20	37014	0,04	37014	0,04
32	Chain for intermediate outlet, 833mm	45104-3	0,15	45104-3	0,15
33	Pinion gear motor RMI 28	81189	5,86	81189	5,86
34	Switch with gear FR 531-M2	88004	0,08	88004	0,08
35	Key 5x5x20mm	87061	0,01	87061	0,01
36	Cover for 1.0 m extension with outlet	45103	15,60	45103	15,60
37	Crimped connector link for chain 555	87103	0,10	87103	0,10
38	Straight connector link for chain 555	87102	0,10	87102	0,10
39	Rubber flap with plate and bolt	20171	0,10	40171	0,10
40	Chain running metres kpl.	20028	2,00	40028	4,00
41	Suspension bracket	00081	3,00	00081	3,00
42	Hoisting hook bracket for suspension bracket	00083	1,00	00083	1,00
43	Shaft for elevator head d30	20016	1,70	40016	2,00
45	Pulley kit, 2 grooves d24	52111	18,0	52111	18,0
45	Pulley kit, 2 grooves d28	52112	20,0	52112	20,0
45	Pulley kit, 3 grooves d28	52113	25,0	52113	25,0
45	Pulley kit, 4 grooved d38	52114	28,0	52114	28,0
46	Motor stand, large	51068	3,50	51068	3,50
47	V-belt AX 54 – 1372 mm	84254	0,15	84254	0,15
47	V-belt AX 56 – 1452 mm	84256	0,15	84256	0,15
48	Internal guard for elevator head	51069	2,00	51069	2,00
49	External guard for elevator head	51070	3,20	51070	3,20
50	V-belt pulley A71 2 gr. d24	82081	0,70	82081	0,70
50	V-belt pulley A71 2 gr. d28	82113	0,60	82113	0,60
50	V-belt pulley A71 3 gr. d28	82177	1,00	82177	1,00
50	V-belt pulley A71 4 gr. d38	82179	1,00	82179	1,00
51	V-belt pulley A355 2 gr. d30	82131	8,50	82131	8,50
51	V-belt pulley A355 3 gr. d30	82193	10,80	82193	10,80
51	V-belt pulley A355 4 gr. d30	82235	15,00	82235	15,00
52	Inlet trough 2.0 m with return channel and inspection door without chain	44014	48,00	45014	52,00
52	Inlet trough 1.25 m with return channel without chain	44011	32,00	45011	34,00
52	Inlet trough 1.0 m with return channel without chain	44012	24,00	45012	26,00
52	Inlet trough 0,5 m with return channel without chain	44013	12,00	45013	13,00
53	Adjuster plate 1.0 m for return channel	44173	2,25	44173	2,25
53	Adjuster plate 1.25 m for return channel	44172	2,80	44172	2,80
53	Adjuster plate 0.5 m for return channel	44174	1,10	44174	1,10
54	Transition flange inlet trough/extension	44008	2,00	45008	2,00
55	Inspection door for return channel	44170	0,85	45070	0,85
56	Tension section without chain	44085	11,00	45085	12,50
57	Cover plate for tension station	44088	1,14	45088	1,53
58	Bend 45° without chain with sprocket.	44031	29,26	45031	31,6
60	Welded middle section for 45° bend	44032	5,60	45032	7,10
61	Shroud for 45° bend	44031-3	0,27	45031-3	0,38
62	Return flow gear 45° - 90° bend	83006	5,00	83006	5,00
63	Spacer d30x32,5/d30x66	44060-6	0,03	40008	0,07
64	Sprocket 7 Z welded kpl. d25	20034	0,73	20034	0,73

Pos.	Description	T20	Kg.	T40	Kg.
65	Gable plate for 45° bend	44060-2	1,12	45060-2	1,50
66	Assembling plate for 45-90° bend	51060-9	0,13	52060-9	0,20
67	Wearing plate for 45° bend	44060-3	0,28	44060-3	0,28
68	Bracket for manual pull, intermediate outlet	45105-1	0,15	45105-1	0,15
69	Wirelock for 5 mm wire	92105	0,02	92105	0,02
70	Wire for intermediate outlet	45105-2	0,20	45105-2	0,20
71	Connecting link 1/2" x 3/16" straight	37016	0,01	37016	0,01

Please state the conveyor type (T44/T45) and spare part number when ordering.

JEMA AGRO A/S
Kløservejen 2, Sahl, DK-8850 Bjerringbro, Denmark
Tel.: +45 8668 1655, Fax: +45 8668 0074
www.jema.as